GUIDELINE DG03

Wind Turbine Design

Yaw & Pitch Rolling Bearing Life

Rev	Date	Author	Signature	Date	Approval	Signature	Notes

Rev.	Description
990610	Draft

NOTICE

This report was prepared as an account of work sponsored by an agency of the United States government. Neither the United States government nor any agency thereof, nor any of their employees, makes any warranty, express or implied, or assumes any legal liability or responsibility for the accuracy, completeness, or usefulness of any information, apparatus, product, or process disclosed, or represents that its use would not infringe privately owned rights. Reference herein to any specific commercial product, process, or service by trade name, trademark, manufacturer, or otherwise does not necessarily constitute or imply its endorsement, recommendation, or favoring by the United States government or any agency thereof. The views and opinions of authors expressed herein do not necessarily state or reflect those of the United States government or any agency thereof. The present document might be copied and distributed only as far as necessary for the scope of a United States certification process.

Table of Contents

1. Introduction **5**
2. Scope **5**
3. Relevant Recognized Standards and Guidelines **5**
4. Definitions, Symbols & Abbreviations **6**
5. Yaw and Pitch Bearing Design Types **7**
6. Summary of Method **9**
7. Models **10**
7.1 Life Model for Rotating Bearings **10**
7.1.1 Thrust Basic Dynamic Capacity ***11***
7.1.2 Dynamic Equivalent Thrust Load ***13***
7.1.3 Bearing L10 & B10 Life ***15***
7.1.4 Life Adjustment Factors ***16***
7.2 Life Model for Oscillating Bearings **20**
7.2.1 Thrust Basic Dynamic Capacity in Oscillation ***22***
7.2.2 Bearing L10 & B10 Life in Oscillation ***23***
7.3 Duty Cycle and Equivalent Dynamic Load **24**
7.4 Static Capacity Model **24**
7.4.1 Maximum Ball or Roller Load ***25***
7.4.2 Maximum Hertz Contact Stress ***25***
7.4.3 Point Contact Ellipse Dimensions ***26***
7.4.4 Line Contact Rectangle Dimensions ***30***
7.4.5 Static Factor – SF ***31***
7.4.6 Effect of Surface Hardness on Static Capacity **32**
7.5 Core Interface Model **33**
7.5.1 Allowable Yield Shear and Fatigue Shear ***34***
7.5.2 Calculation of Subsurface Shear Stress ***35***
7.5.3 Evaluation of Case – Core Interface ***37***
7.6 Surface Model (Lubrication) **37**
7.7 Non-Rolling Items & Friction Torque **38**
7.7.1 Friction Torque ***38***
7.7.2 External Bolting ***39***
7.7.3 Cages or Separators ***39***
7.7.4 Integral Seals ***40***
8. Recommended Practices **40**
11. Appendices
Example A **41**
Example B **59**
12. References **40**
13. Appendices

Tables
Table 1 – Values for Ball Thrust Bearings ***12***
Table 2 – Values for Roller Thrust Bearings ***13***
Table 3 – Life Adjustment Factor, a1, for Reliability ***17***
Table 4 – Life Adjustment Factor, a2, for Hardness ***18***
Table 5 – Life Adjustment Factor, a3, Effects of Supporting Structures ***19***
Table 6 – Static Capacity (Hertz Stress) ***25***

Table of Contents (continued)

Table 7 – Point Contact Dimensionless Parameters 28
Table 8 – Radii of Curvature for a Four-Point Contact Ball Bearing 29
Table 9 – Radii of Curvature for a Cross Roller Bearing 30
Table 10 – Effect of Surface Hardness on Static Capacity 33
Table 11 – Allowable Subsurface Shear Stresses 34
Table 12 – Subsurface Shear Stress Parameter 36
Table 13 – Hertz Contact Stress Limits 38

Figures

Figure 1 – Yaw and Pitch Bearing Types 8
Figure 2 – Four Point Contact Ball Bearing 9
Figure 3 – Application of Loads for a Single Bearing System 14
Figure 4 – Amplitude Angle for One Cycle of Oscillation 20
Figure 4a – Dither angle vs. Bearing Pitch Drum 22
Figure 5 – Point Contact – Principal Radii 26
Figure 6 – Radius Sign Convention 27
Figure 7 – Principal Radii for a Four-Point Contact Ball Bearing 29
Figure 8 – Typical Subsurface Shear Stress Curve 33
Figure 9 – Allowable Subsurface Shear Stresses 35
Figure 10 – Subsurface Shear Stress Parameter 35

1. Introduction

The National Renewable Energy Laboratory (NREL) requested John H. Rumbarger, P.E., Inc. (JHRINC) to review (NREL) Guideline DG03, "Wind Turbine Design, Yaw and Pitch Rolling Bearing Life" This review of the guideline is authorized by NREL Subcontract No. ACE-0-30021-01.

The purpose of this effort is to provide a comprehensive review of the draft Guideline DG03 by a recognized expert in turntable bearing design and life analysis. The methods for bearing analysis and bearing life rating presented are consistent with methods in current use by wind turbine designers and rolling bearing manufacturers.

This report describes the standards, methods and design criteria to be used for bearing analysis. A follow on report will give specific numerical examples of the application of the standards, methods and design criteria for typical wind turbine yaw and pitch bearings.

Methods for determining loads and moments to be used for the rating of yaw and pitch bearings will be covered by a separate Design Guide.

2. Scope

The NREL guideline DG03 is intended to be used with relevant standards and guidelines for the design and design verification of yaw and pitch rolling bearings for wind turbines. The purpose of the guideline is to provide a method for determining the life of yaw and pitch rolling bearings used in wind turbines and to provide general recommendations for enhancing bearing life in these applications.

3. Relevant Recognized Standards and Guidelines

1. ISO 281:1990(E),"Rolling Bearings-Dynamic Load Ratings and Rating Life", ISO, Geneva, Switzerland.

2. ISO 76:1987(E),"Rolling Bearings-Static Load Ratings",ISO Geneva, Switzerland.

3. ANSI/AFBMA 9-1990,"Load Ratings and Fatigue Life for Ball Bearings",ANSI, New York.

4. ANSI/AFBMA 11-1990,"Load Ratings and Fatigue Life for Roller Bearings", ANSI, New York

5. STLE SP-34,"STLE Life Factors for Rolling Bearings", E.V. Zaretsky, Editor, STLE,1992

6. Rumbarger, J.H. and Poplawski,J,V.,1994,"Correlating Computerized Rolling Bearing Analysis Techniques to the ISO Standards on Load Rating and Life", STLE *Trans*,**37**,pp793-801.

7. Rumbarger, J.H. and Jones, A.B.,1968,"Dynamic Capacity of Oscillating Rolling Element Bearings", ASME, *Jnl of Lube Tech,* **90**,pp 130-138.

8. Rumbarger, J.H.,1998,"Fatigue Life for Oscillating Ball and Roller Bearings-Draft Section for STLE Life Factors for Rolling Bearings", To be published in [3.5]

9. Harris, T.A.,1991,"Rolling Bearing Analysis", *John Wiley & Sons,*3rd Edition.

10. Sague. J.E., and Rumbarger, J.H.,1977,"Design Criteria to Prevent Core Crushing Failure in Larger Diameter, Case Hardened, Ball and Roller Bearings", ASME paper 77-DE-39

11. Zwirlein,O., and Wieland, W.A.,1983,"Case Depth for Induction Hardened Slewing Ring Bearings", SAE Paper No.831371

12. Rumbarger, J.H., 1968, "Evaluation of the Life Margin of Oscillating Needle Roller Bearings", ASLE *Trans,* Vol 12, Nr. 2, pp162-170.

4. Definitions, Symbols & Abbreviations

Λ : lubrication film parameter
Σ (ρ) : summation of curvature
ϕ : angle phi – angular location of individual ball or roller
θ : angle theta – amplitude of oscillation
α: contact angle
(ρ) : the sum of the radii of curvature and F
πab : area of an ellipse
θcrit : critical amplitude of oscillation
θdith: repetition of oscillation cycles at small amplitudes
τ45 : maximum shear stress
a_1 : life adjustment factor for reliability
a_2 : life adjustment factor for special bearing properties
a_3: life adjustment factor for application conditions
ABMA: American Bearing Manufacturers Association – was AFBMA
AFBMA : Anti-Friction Bearings Manufacturers Association
ANSI : American National Standards Institution
B : bearing life for hours of continuous operation (revolutions)
b : contact semi width (inch or mm)
b/a : contact ellipse dimensions ratio
B_{10}: bearing life expressed in hours of continuous operation
Ca : basic dynamic thrust capacity
d : diameter of rolling element
d_m : pitch diameter of bearing (length)
e : eccentricity
f_I: inner ball groove % curvature
fo: outer ball groove % curvature
EHD : elastohydrodynamic lubrication
F_A : applied axial load (force)
F_{Ay} , $F_{Ax:}$: components of F_A along the y and x axes (force)
$f_{c\,m}$: ANSI-AFBMA bearing geometry and material coefficient after 1990

FEA : finite element analysis
F_R : applied radial load (force)
F_s : hardness reduction factor
HV : Vickers hardness number
ISO : International Standards Organization
L : bearing life for rotation (revolutions)
L_{na} : adjusted rating life
L_{10} : bearing life for rotation for 90% survival (revolutions)
lbf: pounds force
M : overturning moment
mr: Millions of revolutions
N: Newton's force
OPM : oscillations per minute
P_e : dynamic equivalent load
P_n : equivalent load for load-speed condition n
Q (φ) : individual ball or roller load
Q_{max} : maximum ball or roller load
rpm : speed of revolution
SF : Static Factor
S_{max} : Maximum Hertz contact stress on roller or ball with highest load
SsΛ/b : values for the parameter
TDC : thin dense chrome
Tq = Running Friction Torque. (in-lbs or N-m)
X : dynamic radial load factor
Y: dynamic axial load factor
z : depth of maximum shear stress (length)
Z : number of rolling elements in a row
z/b : Dimensionless depth parameter

5. Yaw and Pitch Bearing Design Types

The larger wind turbines use special configuration, four-point contact ball bearings or cross roller bearings for the blade retention pitch bearing and the yaw bearing positions. These two common bearing configurations are shown in Figure 1. The bearing consists of two, ring rolled forgings with either balls or rollers. The inner and outer, continuous ring forgings, have mounting holes which allow the bearing to be bolted directly to the supporting structures. The balls or rollers are inserted into the bearing through a radial cylindrical hole in one of the rings. The hole is then closed by means of a loading plug, which is contoured to the ball path or roller path surface. Both the four-point contact ball bearing and the cross roller bearing have two distinct load paths and are capable of carrying simultaneous radial, axial and overturning moment loads.

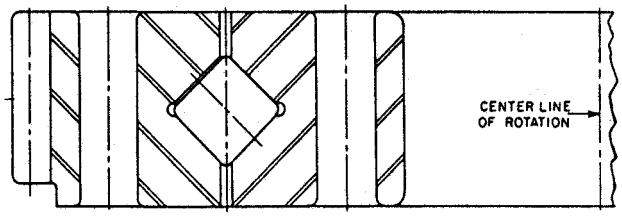

Cross Roller (X) Bearing

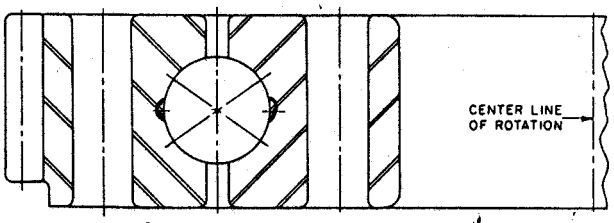

Four-Point Contact Ball Bearing

Figure 1.

Yaw and Pitch Bearing Types

It is also common practice to cut a spur gear integral with one of the bearing races, especially for the yaw bearing application. A detailed cross-section sketch and cutaway sketch of a four-point contact ball bearing is also shown in Figure 2. Individual plastic spacers separate the balls. These spacers are cylindrical with hemispherical ends as shown in Fig. 2. The individual rollers in the cross roller bearing are also separated by plastic, saddle shaped spacers. The rollers in the cross roller bearing alternate in their orientation to carry load.

The inner and outer rings are hardened to 250BHN to 300 BHN hardness throughout. This is referred to as the core hardness of the ring. The core hardness should provide adequate core yield and fatigue strength, yet remain at a low enough hardness to facilitate machining of the rings and mounting bolt holes. The actual ball or roller path is induction heated and quenched to provide a hard case. The surface hardness of the race path is RC 58 minimum. The depth of the hardened case is defined as the depth to a hardness of RC 50.

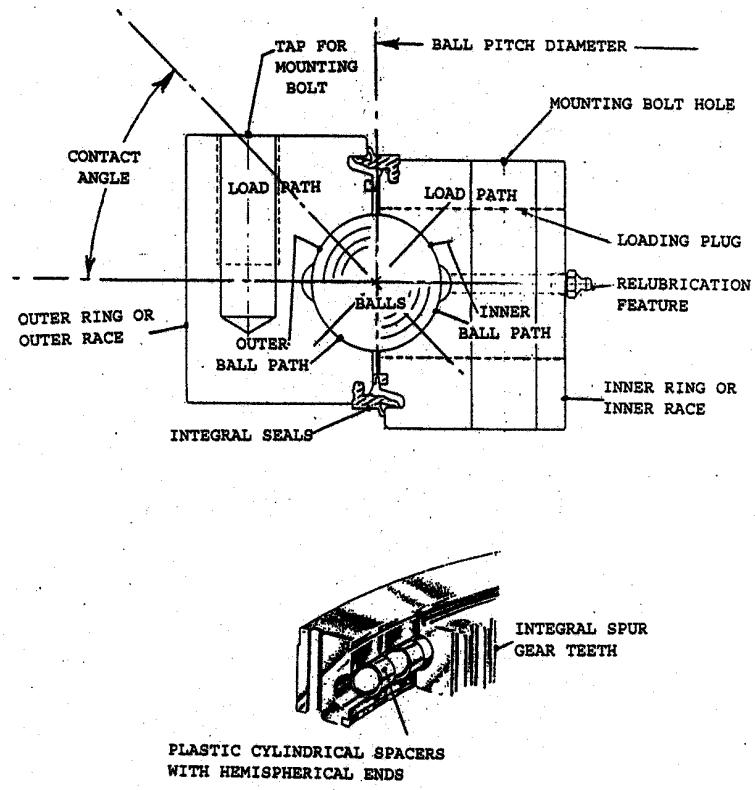

Figure 2.
Four-Point Contact Ball Bearing

6. Summary of Method

The method for determining rolling bearing life in wind turbine yaw and pitch applications is based on, and similar to, the ANSI-AFBMA and ISO dynamic load rating method [1,2, 3,4]. Basically this involves four steps:

- Determining the Dynamic Load Rating for the bearing
- Determining life adjustment factors for the application
- Determining the equivalent load, and,
- Using those values, computing the life of the bearing.

The Dynamic Load Rating for the bearing may be obtained from the bearing manufacturer or calculated using the equations presented in this guide. [6]. The classical life rating model is modified [7,8] for application to oscillating bearings.

Life Adjustment Factors are described by Zaretsky [5], and applied to wind turbine yaw and pitch bearings in this guide.

The equivalent load to be used with the Basic Dynamic Capacity of a bearing for life calculation is also described and equations given in this guide.

Proper design of a yaw or pitch bearing must satisfy five design criteria. Each of the criteria will be addressed in detail in this guide.

- Bearing Fatigue Life. (spalling fatigue)
- Bearing Static Capacity
- Adequate Case Depth and Core Hardness
- Adequate lubrication (surface failure)
- Non-Rolling Items & Friction Torque
  - Friction Torque
  - External Bolting
  - Cages or Separators
  - Integral Seals

The relationships used in the method for determining the Basic Dynamic Capacity in Oscillation, Life Adjustment Factors, and Equivalent Load are given in Sect. 7.2.

7. Models

In general, one method of demonstrating adequate life for rolling bearings is to use models to determine the minimum life. For rolling bearings this is generally done by using a model initially proposed by Lundberg and Palmgren in the 1940's. A method has been developed around this model and forms the basis of the ISO [1,2] and AFBMA [4] load rating and fatigue life standards. The details of this model and the determination of coefficients and material factors is summarized in [6]. This method determines the statistical probability of survival (failure). The life of the bearing is expressed in terms of millions of revolutions of the inner race (L) or hours of continuous operation (B). The usual industry practice is to specify the 10% probability of failure and express it as either L10 or B10 life.

The bearing life model refers to the first macroscopic evidence of spalling fatigue of the race path or the ball or roller (element) surfaces. Failure is defined as a spalled area in excess of 0.01 square inches (6.25 square millimeters). Actual field (operational) failure of a yaw or pitch bearing will occur at a later time after the accumulation of damage. This increased time or life margin [13] can equal or exceed twice the L10 or B10 life in some applications. Periodic oil or grease analysis can be helpful in determining the approach of a field failure.

The life model is based on a consideration of the stressed volume of material in a ball-race or a roller-race contact and the number of stress repetitions. This method has been extended and used for life rating of oscillating rolling bearings [7,8].

7.1 Life Model for Rotating Bearings

The ball and roller bearings, Figure 1., used for wind turbine yaw and pitch bearings are <u>thrust</u> type bearings. The primary (heaviest) loads are the thrust and the overturning moment loads. The distribution of the applied load to the individual balls or rollers is predominately one of thrust, where the number of loaded elements is greater than one half. Radial load ideally is distributed over half or less of the rolling elements. Radial load when applied simultaneously

with thrust and overturning moment loads affects but does not significantly alter the thrust type of load distribution.

7.1.1 Thrust Basic Dynamic Capacity

The Basic Dynamic Capacity is defined as that constant centric thrust load which a rolling bearing could theoretically endure for a basic rating life of one million revolutions. The material factor, fcm, for ball thrust bearings is given in Table 1.. These values have been calculated [6] for large diameter bearings and include the ISO factor (bm=1.3) for post 1990 rating life. The Table 1. values have also been adjusted for a ball-race conformity factor of 53%. A multiplying factor is also noted for ball thrust bearings with a 52% ball-race conformity factor. The 52% factor is sometimes used for pitch ball bearings. The ball-race conformity factor is defined as the cross groove radius of the ball path divided by the ball diameter.

The equations for the Basic Dynamic Thrust Capacity, Ca, depends upon the ball diameter. The capacity is reduced for balls greater than one inch (25.4 mm) diameter. [1,3]. For Ball Thrust Bearings with balls less, or equal to, 1" (25.4 mm) diameter.

$$Ca = fcm\left(\cos \propto\right)^{0.7} Z^{2/3} d^{1.8} \tan \propto \quad (lbf \ or \ N) \tag{1}$$

For Ball Thrust Bearings with balls greater than 1" (25.4) mm diameter.

$$Ca = fcm\left(\cos \propto\right)^{0.7} Z^{2/3} d^{1.4} \tan \propto \quad \left(lbf\right) \tag{2}$$

$$Ca = 3.647\, fcm\left(\cos \propto\right)^{0.7} Z^{2/3} d^{1.4} \tan \propto \quad \left(N\right) \tag{3}$$

Table 1.
fcm, Values for Ball Thrust Bearings

AFBMA fcm FOR THRUST BALL BEARINGS 45 Deg. and 60 degrees 53% Curv (for 52% curv multiply fcm values by 1.172)					
d*Cos(Alpha) dm	Inch Values			Metric Values	
Gamma	45 Degrees fcm	60 Degrees fcm		45 Degrees fcm	60 Degrees fcm
0.002	2,865	2,666		37.69	35.07
0.004	3,527	3,282		46.39	43.18
0.006	3,983	3,706		52.39	48.76
0.008	4,341	4,040		57.10	53.14
0.010	4,640	4,319		61.04	56.81
0.020	5,703	5,308		75.03	69.83
0.030	6,424	5,978		84.50	78.64
0.040	6,976	6,492		91.76	85.40
0.050	7,423	6,908		97.64	90.87
0.060	7,794	7,254		102.52	95.42
0.070	8,107	7,545		106.64	99.25
0.080	8,372	7,792		110.13	102.50
0.090	8,597	8,002		113.09	105.26
0.100	8,788	8,179		115.60	107.59

The fcm material factor values for thrust roller bearings are given in Table 2. The range of the Gamma factor is again reduced for large diameter bearings. The ISO bm=1.0 factor for post 1990 ratings [1,4].

For Roller Thrust Bearings:

$$Ca = fcm\left(le\cos\propto\right)^{7/9} Z^{3/4} d^{29/27} \tan\propto \quad \left(lbf\ or\ N\right) \quad (4)$$

Table 2.
fcm, Values for Roller Thrust Bearings

AFBMA & ISO Roller Thrust Bearing - fcm 45 Degrees Contact Angle			
d Cos(Alpha) /dm	45 Deg Eng fcm		45 Deg Metric fcm
0.001	5,960		66.36
0.002	6,952		77.41
0.004	8,109		90.30
0.006	8,873		98.81
0.008	9,458		105.32
0.010	9,937		110.65
0.020	11,577		128.91
0.030	12,641		140.76
0.040	13,435		149.60
0.050	14,064		156.61
0.060	14,577		162.32
0.070	15,003		167.07
0.080	15,359		171.03
0.090	15,658		174.35
0.100	15,906		177.12

7.1.2 Dynamic Equivalent Thrust Load

A typical load application is shown in Figure 3. Radial (Fr), thrust (Fa) and overturning moment (M) loads are shown as applied to the center of the bearing coordinate system. The radial and moment loads are sometimes given as two orthogonal vectors. The root-mean-square value of the two orthogonal components is then used to determine the magnitude of Fr and M.

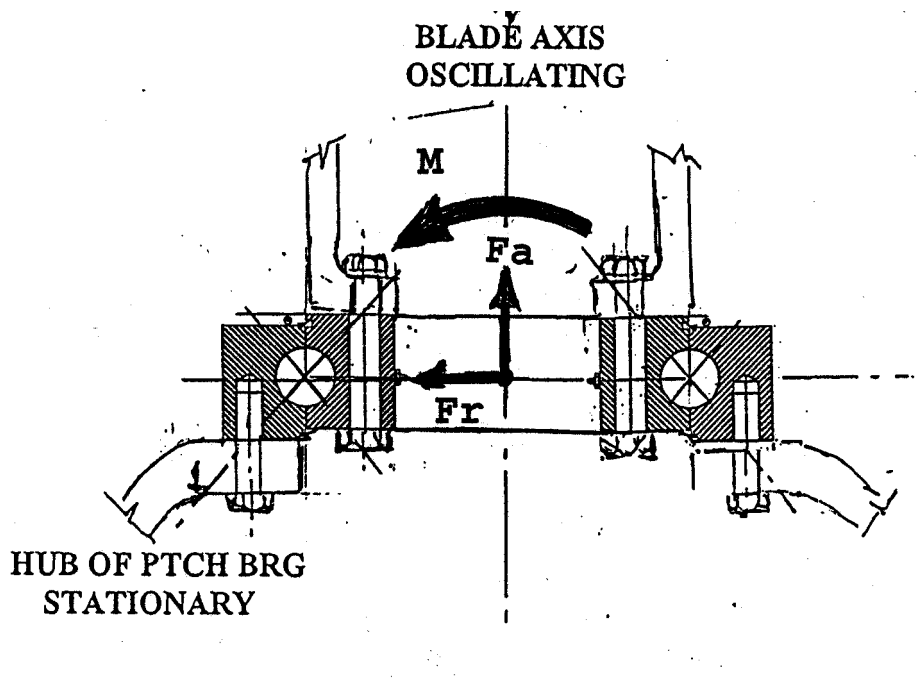

Figure 3.
Application of Loads for a Single Bearing System

The dynamic equivalent axial load , Pa, is defined as that constant centric (uniformly distributed) axial load under the influence of which a rolling bearing would have the same life as it will attain under the actual load conditions.

The dynamic equivalent axial load, Pa, is also defined in terms of the individual ball or roller loads, Q(φ) [6] as:

Dynamic Equivalent Thrust Load for Ball Bearings:

$$Pa = \left(\frac{1}{Z} \sum_{n=1}^{Z} Q_{\varnothing}^{3} \right)^{1/3} Z \sin \propto \qquad (lbf \ or \ N) \tag{5}$$

Where Z equals the total number of balls in the bearing (whether loaded or not loaded.)

Dynamic Equivalent Thrust Load for Cross Roller Bearings

$$Pa = \left(\frac{1}{Z} \sum_{n=1}^{Z} Q_{\varnothing}^{4} \right)^{1/4} Z \sin \propto \qquad (lbf \ or \ N) \tag{6}$$

Where Z equals the number of rollers oriented to carry thrust load in one direction (whether loaded or not loaded.)

The dynamic equivalent thrust load may also be hand calculated from the applied loads and moment as:

$$Pa = \left(0.75F_r + F_a + \frac{2M}{dm} \right) \quad (lbf \ or \ N) \tag{7}$$

7.1.3 Bearing L10 & B10 Life

The life of an individual bearing is defined as the number of revolutions which one of the bearing rings (or races) makes in relation to the other ring (or race) before the first evidence of fatigue develops in the material of one of the rings (or races) or rolling elements. The L10 life is the life expressed in millions of revolutions (mr) with a 10% probability of failure.

For Ball Thrust Bearings:

$$L_{10} = \left(\frac{Ca}{Pa} \right)^{3} \qquad (mr) \tag{8}$$

For Roller thrust Bearings:

$$L_{10} = \left(\frac{Ca}{Pa} \right)^{10/3} \quad (mr) \tag{9}$$

The adjusted rating life, Lna, is the life adjusted for a different failure probability, for special bearing properties and for special operating conditions.

$$L_{na} = a_1 a_2 a_3 L_{10} \quad (mr) \tag{10}$$

The life may also be expressed in hours at a constant speed of revolution (rpm). as:

$$B_{10} = \frac{L_{na} \; x \; 10^6}{60 \; x \; RPM} \quad (Hours) \tag{11}$$

The pro-rated bearing life for a bearing with a number of individual b10 life values at specified percentages of operating time is:

$$B_{10} = \left(\frac{\frac{\%_1}{{}_1B_{10}} + \frac{\%_2}{{}_2B_{10}} + \ldots\ldots \frac{\%_n}{{}_nB_{10}}}{100} \right)^{-1} \quad (Hours) \tag{11A}$$

7.1.4 Life Adjustment Factors

a1, Life Adjustment Factor for Reliability

The 90% probability of survival level is used by the bearing rating standards [1-4] to define bearing life. Life Adjustment Factors for higher probability of survival are given in Table 3. The a1 factors in Table 3. may also be used to estimate the increased reliability of a bearing design. As an example, consider a yaw bearing that has an adjusted rating life, Lna = 30 years, and the design specification calls for an L10 life of 20 years. The ratio of 2/3 would indicate a probability of survival of approximately 95% per Table 3.

Table 3.
Life Adjustment Factor, a1, for Reliability

Adjusted rating life, L_n	Reliability, percent	Life factor, a_1
From Anon. (1990a)		
$^{a}L_{10}$	90	1.00
L_5	95	.62
L_4	96	.53
L_3	97	.44
L_2	98	.33
L_1	99	.21
From Tallian (1962)		
$L_{0.5}$	99.5	0.15
$L_{0.2}$	99.8	.08
$L_{0.1}$	99.9	.053
$L_{0.06}$	99.94	.053

a2, Life Adjustment Factor for Special Bearing Properties (Effect of Rolling Path Hardness)

The bearing rating life is based on bearings with a rolling path hardness of RC 58 minimum. One manufacturer of large diameter four-point contact ball bearings and cross roller bearings adheres to a specification of RC 56 minimum for the rolling path hardness. The a2 Life Adjustment factor is used to account for a rolling path hardness of less than RC 58. Table 4. gives values for a2 as a function of hardness.

a2 LAF for Hardness: [9]

$$a_2 = \left[\left(\frac{RC}{58} \right)^{3.6} \right]^r \tag{12}$$

Where: p = 3 for ball bearings

p = 10/3 for roller bearings

Table 4.

Life Adjustment Factor, a2, for Hardness

Hardness RC	a1 Ball Brg	a1 Roller Brg.
58	1.00	1.00
56	0.68	0.66
54	0.46	0.42

a3, Life Adjustment Factor for Operating Conditions
Effect of Lubrication

The a3 Life Adjustment Factor is used to account for lubrication conditions and for the effects of the bearing supporting structures upon the predicted bearing life.

A common and distinguishing feature of yaw and pitch bearings applications is that both involve oscillatory motion and a low value of the lubrication parameter, Λ. The usual calculated value for Λ is 0.5 or less. Λ is defined as the ratio of the elastohydrodynamic (EHD) oil film thickness (base oil in the grease) to the composite surface finish of the races and rolling elements. Favorable values of Λ greater than 1.25 will lead to an increase in life.

The EHD oil film thickness is influenced, primarily by rolling speed, oil viscosity and the composite surface finish. Ball or roller load has a very weak influence on oil film thickness. Rolling motions are slow and reversing (oscillatory) for yaw and pitch bearings. The oil viscosity is limited by practical measures such as pumpability of a grease at low temperatures, etc. The surface finish of the rolling paths is also limited to about 16 rms. Therefore it is not possible to achieve a Λ factor greater than 0.5.

The ability of the grease lubricant to function as a good boundary lubricant and to maintain as thick an oil film as possible in the contact region is very important. It is recommended that the selected grease have good boundary lubrication characteristics, such as, anti-wear and extreme pressure additives. The main function of the grease is to coat the rolling surfaces and to prevent corrosion damage or micro-pitting of the contact areas. Fretting corrosion or "false brinelling" of the rolling element contacts is the failure mechanism to be prevented in small oscillatory motions. The grease should also have the ability to protect the rolling surfaces from

entrapped water. It is desirable to use only those lubricants which have demonstrated good performance in existing yaw and pitch bearing applications. To minimize the tendency for displacement of the lubricant from the contact region, it is recommended that the yaw or pitch bearing be periodically rotated through a large amplitude oscillation. The angle of rotation should be greater than three times the critical amplitude. This should be accomplished at least daily and before any planned shutdown of the equipment.

An a3 Life Adjustment Factor = 1.0 for lubrication is recommended. No de-rating is suggested. All yaw and pitch bearings are subjected to similar lubrication conditions. Experience suggests that the state-of-the art for rating such bearings (as described in this Design Guide) is satisfactory and acceptable without further de-rating.

Effect of Supporting Structures

The bearing life rating standards and methods [1-4] are based on an assumption of rigid, flat and circular bearing rings. Yaw and pitch bearings are large diameter, thin, cross-section rings which are directly bolted to the supporting structures, Figure 3. The bearing inner and outer races conform to the structural shapes of their supporting structures. The presence of hard-points in a supporting structure [5] will result in a peak ball or roller load which is much higher than the element load expected under ideal mounting conditions. It is difficult to design a wind turbine gear box and platform mounting to the supporting tower which does not include some hard-point effects.

One method used to determine the influence of the supporting structures upon bearing life is a complete finite element analysis, FEA, of the system. The two supporting structures are connected by spring elements which represent a group of the rolling elements. The resulting graph of the actual element loads to the ideal element loads will give an indication of the effect of the structural deformations under load. Equations (5 & 6) are used to determine the Dynamic Equivalent Thrust Load.

Actual experience (FEA analysis) is limited at this time regarding the effects of various mounting structures on bearing life. Table 5. shows the best estimates available at this time.

Table 5.
Life Adjustment Factor, a3
Effects of Supporting Structures

Application	Condition	a3 Life Adj Factor
Pitch Brg.	Hub Deformations	0.85
Yaw Brg	Tubular Tower	0.85
Yaw Brg	4 Leg Tower	0.25

7.2 Life Model for Oscillating Bearings

Experience has shown that the fatigue life of rolling element bearings subjected to cyclic oscillation of the races under constant load cannot be adequately described by the same life formulas used to describe the fatigue life of continuously rotating bearings. The Basic Dynamic Capacity equations for continuously rotating bearings (Sect. 7.1) have been modified [7,8] to apply to oscillating bearings.

The critical amplitude (angle) of oscillation, θcrit, is defined as the amplitude (angle) of rotation of the inner race relative to the outer race for which the race path stressed by one rolling element (ball or roller) just touches but does not overlap the race path stressed by adjacent rollers.

$$q\,crit = \frac{720}{Z\left(1 \mp g\right)} \qquad \left(\deg rees\right)$$

$$g = d\cos\propto \Big/ dm \tag{13}$$

Upper signs refer to the inner race
Lower signs refer to the outer race

The amplitude of oscillation is defined in Figure 4. The angle theta, θ, is one-half the total arc traced during one cycle of oscillation. [7,8]. The angle phi, ϕ, used by Harris [9], is one-quarter of the total arc traced during one cycle.

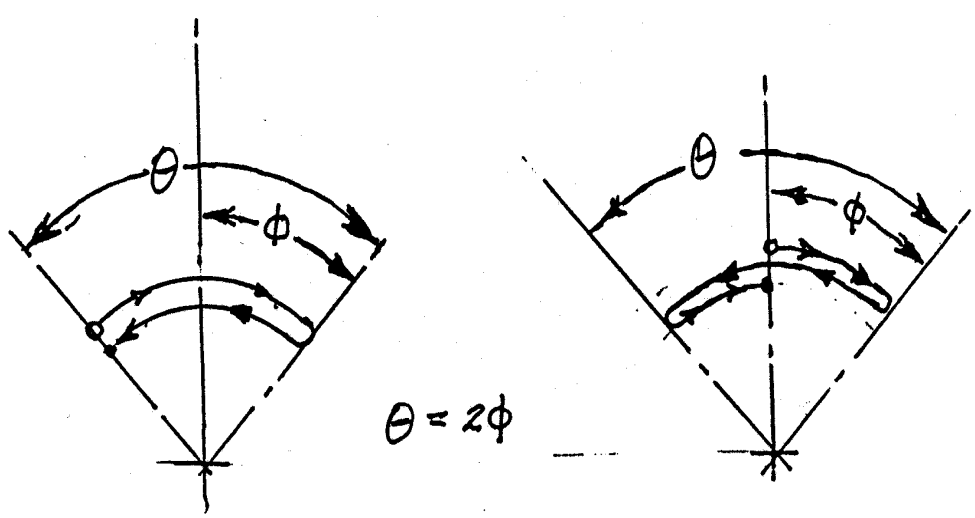

Figure 4.
Amplitude Angle for One Cycle of Oscillation

When the amplitude of oscillation, θ, is greater than the critical amplitude, θcrit, the contact stresses of the individual rolling elements overlap. The total stressed volume for each race path is then proportional to the product of the arc length of the amplitude of oscillation, the element contact width and the depth to the critical shear stress amplitude. The total stressed volume and number of stress repetitions per cycle are identical to a bearing in continuous rotation when θ = 180 degrees.

When the amplitude of oscillation, θ, is less than the critical amplitude, θcrit, overlapping of the individual element stresses does not occur. Each rolling element has its own discrete stressed volume. These individual stressed volumes must then be statistically combined to calculate the overall capacity and life.

A third zone of operation is oscillation at very small amplitudes where the stressed area, or footprint, between the element and the race is only partially uncovered and retraced. The amplitude is defined, θdith, as the width of the contact footprint divided by the radius of the rolling path. Repetition of oscillation cycles at small amplitudes is commonly called *dither*.

$$q\,dith = \frac{720b}{dm\left(1 \mp g\right)p} \qquad \left(\text{degrees}\right) \tag{14}$$

b = Contact semi-width (inch or mm)
dm = Bearing pitch diameter (inch or mm)
Upper sign applies to inner race contact.
Lower sign applies to outer race contact.

Dither motion in yaw and pitch bearing applications can cause wear damage and, as a consequence, they can be a factor in determining wear or fretting corrosion life. These motions need to be included in the analysis if their amplitudes exceed, θdith. Motions below this amplitude are estimated to have negligible effect on wear life for normal operating conditions when good lubrication is maintained. The use of a good boundary lubricant will help to minimize the adverse affect of these small motions on life. Thin dense chrome, TDC, coating of the races and/or solid film lubrication can also be effective.

An estimate of the dither angle, θdith, which is independent of bearing internal geometry, is given in Figure 4a. The dither angle is asymptotic to a value of approximately 0.075 degrees. Thus amplitudes of oscillation which are less than 0.075 degrees need not be included in the determination of the dynamic equivalent load and equivalent amplitude of oscillation. (Refer to NREL DG01). The pitch diameter and internal geometry are not usually known prior to a definitive equivalent load study per NREL DG01.

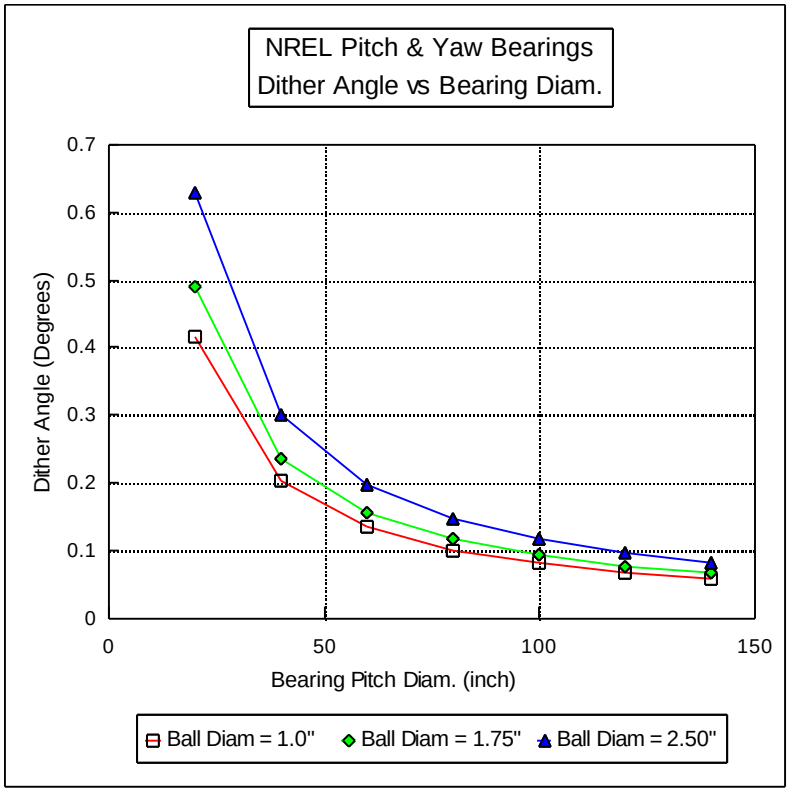

Figure 4a.

Dither Angle vs. Bearing Pitch Diameter

7.2.1 Thrust Basic Dynamic Capacity in Oscillation

The *Thrust Basic Dynamic Capacity* for oscillation may be expressed in terms of the *Thrust Dynamic capacity* for rotation.(Sect. 7.1).[8]

$$\begin{aligned} &Thrust\ Basic\ Dynamic\ Capacity\ in\ Oscillation: \quad q \geq q\,crit \\ &Ca\ \ osc = Ca\ \ rot\ *\ \left(180/q\right)^{1/p*}\left(lbf\ \ or\ \ N\right) \\ &p* = 3\ \ for\ ball\ bearings \\ &p* = 4\ \ for\ roller\ bearings \end{aligned} \tag{15}$$

$$Thrust\ Basic\ Dynamic\ Capacity\ in\ Oscillation:\ q < q\,crit$$

$$Ca\ \ osc = Ca\ \ rot\ *\ \left(180/q\right)^{1/p*e}\ Z^{t} \quad (lbf\ \ or\ \ N)$$

$$p*e = 3\ x\ 10/9 = 10/3 \quad for\ ball\ bearings$$

$$p*e = 4\ x\ 9/8\ = 9/2 \quad for\ roller\ bearings \tag{16}$$

$$t = 0.033\ \ for\ ball\ bearings$$

$$t = 0.028\ for\ roller\ bearings$$

7.2.2 Bearing L10 & B10 Life in Oscillation

Oscillating bearings do not turn through complete continuous revolutions. The amplitude of one oscillation cycle is defined by Figure 4. The speed is expressed in terms of a constant rate of oscillation as oscillations per minute (OPM). The fatigue life of an oscillating rolling bearing is then calculated as:

For Ball Thrust Bearings:

$$L_{10} = \left(\frac{Ca\ osc}{Pa}\right)^{3} \qquad (millions\ of\ \ osc) \tag{17}$$

For Roller Thrust Bearings:

$$L_{10} = \left(\frac{Ca\ osc}{Pa}\right)^{10/3} \qquad (millions\ of\ \ osc) \tag{18}$$

The adjusted life rating is:

$$L_{na} = a_1 a_2 a_3 L_{10} \quad (mr) \tag{10}$$

The life may also be expressed in hours at a constant speed of oscillation (OPM) as:

$$B_{10} = \frac{Lna\ x\,10^6}{60\ x\ 0PM} \tag{19}$$

7.3 Duty Cycle and Equivalent Dynamic Load

One common problem that is not addressed by the standards is how to determine the dynamic equivalent load, Pe, for a bearing operating under a given duty cycle or schedule. For these situations the dynamic equivalent load for each load-speed-oscillation condition of the duty cycle obtained from:

$$P_E = \left[\frac{P_1^r N_1 t_1 q_1^x + P_2^r N_2 t_2 q_2^x + \cdots P_n^r N_n t_n q_n^x}{N_1 t_1 q_1^x + N_2 t_2 q_2^x + \cdots N_n t_n q_n^x} \right]^{1/r} \tag{20}$$

Pn = Equivalent load for load-speed condition n

Nn = Shaft speed for load condition n (RPM or OPM)

tn = Fraction or % of time spent at load-speed condition n

p = 3 for balls and 10/3 for rollers

x = 3 for balls and 4 for rollers: $\theta > \theta crit$

x = 10/3 for balls and 9/2 for rollers: $\theta < \theta crit$

Equation (20) may also be used for non-oscillating conditions by omitting the amplitude of oscillation, θ, from the summation.

7.4 Static Capacity Model

A static load is a load acting on a non-rotating (non oscillating) bearing. Permanent deformations appear in elements and raceways under a static load of moderate magnitude and increase gradually with increasing load.

Experience shows that a total permanent deformation of 0.0001 of the rolling element diameter, at the center of the most heavily loaded element/raceway contact , can be tolerated in most bearing applications without the subsequent bearing operation being impaired. Tests indicate that a ball or roller load of the magnitude indicated corresponds to the calculated maximum Hertz stress shown in Table 6.

Table 6
Static Capacity (Hertz Stress)

Contact	SI Units	Eng. Units
Ball	4,200 (MPa)	609,000 (psi)
Roller	4,000 (MPa)	580,000 (psi)

7.4.1 Maximum Ball or Roller Load

The maximum ball or roller load , Qmax, may be calculated as a function of the applied radial, thrust and moment loading as:

$$Q\max = \left(\frac{2Fr}{Z\cos\propto} + \frac{F_a}{Z\sin\propto} + \frac{4M}{dmZ\sin\propto} \right) \qquad (lbf\ or\ N) \tag{21}$$

7.4.2 Maximum Hertz Contact Stress

The maximum Hertz contact stress is the compressive stress at the center of a ball-race or roller-race contact. The average Hertz contact stress is the element load divided by the contact area. The area of an ellipse is (πab). The semi-major and semi-minor contact ellipse dimensions are a and b. The maximum Hertz contact at the center of the contact is 1.5 times the average.

For Point Contact - (Ball Bearings)

$$S\max = \frac{1.5\ \ Qm\max}{p\,ab} \qquad (lbf\ or\ N) \tag{22}$$

For Line Contact - (Roller Bearings)

$$S\max = \frac{4}{p}\frac{Q\max}{(2ble)} \qquad (lbf\ or\ N) \tag{23}$$

7.4.3 Point Contact Ellipse Dimensions

When two, solid, elastic curved bodies are pressed together under a load, a certain amount of flattening occurs in the neighborhood of the contact point as shown in Figure 5. In Figure 5., body **a** represents the ball, and the body **b** represents either the inner or outer bearing race. The principal radii of curvature may be either positive or negative, depending upon whether the centers of curvature lie within or without the body as shown in Figure 6.

The dimensions of the contact ellipse are calculated as functions of two parameters: the sum of the radii of curvature and F(ρ).

The radius of curvature is the reciprocal of the principal radius of the body.

$$r = 1/R \qquad \left(1/inch \ \ or \ \ 1/mm \right) \tag{24}$$

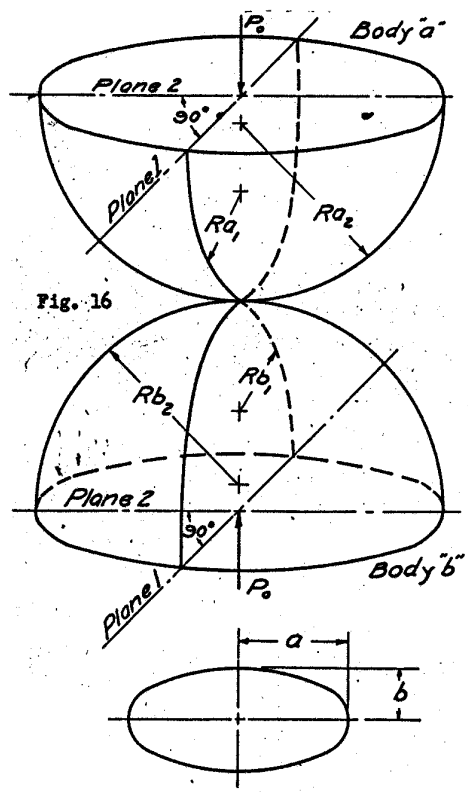

Figure 5
Point Contact – Principal Radii

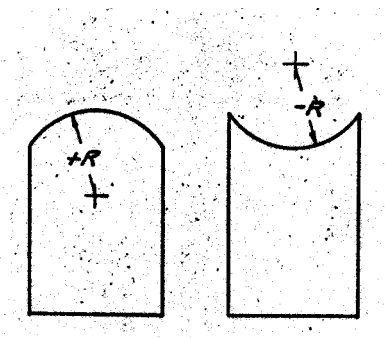

Figure 6.
Radius Sign Convention

The sum of the radii of curvature and F(ρ) are:

$$\sum r = r\,a1 + r\,a2 + r\,b1 + r\,b2 \tag{25}$$

$$F(r) = \frac{(r\,a1 - r\,a2) + (r\,b1 - r\,b2)}{\sum r} \tag{26}$$

The contact ellipse dimensions **a** and **b** are:

$$a = 0.0045944\, a^{*} \left(\frac{Q}{\sum r} \right)^{1/3} \qquad (inch) \tag{27}$$

$$a = 0.0236\, a^{*} \left(\frac{Q}{\sum r} \right)^{1/3} \qquad (mm) \tag{28}$$

$$b = 0.0045944\, b^* \left(\frac{Q}{\sum r} \right)^{1/3} \qquad (inch) \tag{29}$$

$$b = 0.0236\, b^* \left(\frac{Q}{\sum r} \right)^{1/3} \qquad (mm) \tag{30}$$

The values of a* and b* can be interpolated from the values given in Table 7.

The principal radii for a four-point contact ball bearing are described in Figure 7. The equations for the radii of curvature for a four-point contact ball bearing are given in Table 8.

Table 7.
Point Contact Dimensionless Parameters

$F(\rho)$	a^*	b^*
0	1	1
0.1075	1.0760	0.9318
0.3204	1.2623	0.8114
0.4795	1.4556	0.7278
0.5916	1.6440	0.6687
0.6716	1.8258	0.6245
0.7332	2.011	0.5881
0.7948	2.265	0.5480
0.83495	2.494	0.5186
0.87366	2.800	0.4863
0.90999	3.233	0.4499
0.93657	3.738	0.4166
0.95738	4.395	0.3830
0.97290	5.267	0.3490
0.983797	6.448	0.3150
0.990902	8.062	0.2814
0.995112	10.222	0.2497
0.997300	12.789	0.2232
0.9981847	14.839	0.2072
0.9989156	17.974	0.18822
0.9994785	23.55	0.16442
0.9998527	37.38	0.13050
1	∞	0

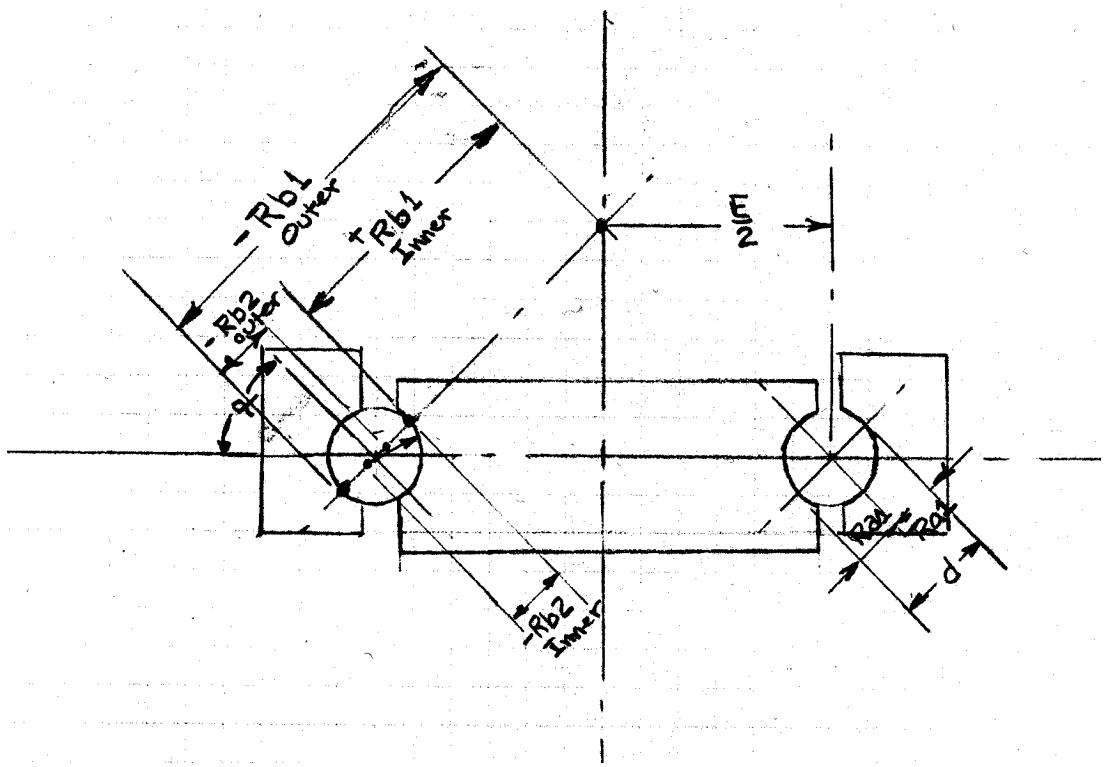

Figure 7.
Principal Radii for a Four-Point Contact Ball Bearing

Table 8.
Radii of Curvature for a Four-Point Contact Ball Bearing

	INNER RACE	OUTER RACE
ρ_{a1}	$\frac{2}{d}$	$\frac{2}{d}$
ρ_{a2}	$\frac{2}{d}$	$\frac{2}{d}$
ρ_{b1}	$+\frac{1}{\left(\frac{d_m}{2\cos\alpha} - \frac{d}{2}\right)}$	$-\frac{1}{\left(\frac{d_m}{2\cos\alpha} + \frac{d}{2}\right)}$
ρ_{b2}	$-\frac{1}{f_i d}$	$-\frac{1}{f_o d}$

7.4.4 Line Contact Rectangle Dimensions

The contact semi-width, b, of the rectangle of contact may be calculated directly as a function of the summation of curvature Σ(ρ). The equations for the contact semi-width are given below. The radii of curvature for a cross roller (line contact) bearing are given in Table 9.

$$b = 0.00028692\left(\frac{Q}{le\sum r}\right)^{1/2} \qquad (inch) \tag{31}$$

$$b = 0.00335\left(\frac{Q}{le\sum r}\right)^{1/2} \qquad (mm) \tag{32}$$

Table 9.
Radii of Curvature for a Cross Roller Bearing

	INNER RACE	OUTER RACE
ρ_a	$+\frac{2}{d}$	$+\frac{2}{d}$
ρ_b	$+\frac{1}{\left(\frac{d_m}{2\cos\alpha}-\frac{d}{2}\right)}$	$-\frac{1}{\left(\frac{d_m}{2\cos\alpha}+\frac{d}{2}\right)}$
$\sum\rho$	$\rho_a+\rho_b$	$\rho_a+\rho_b$

7.4.5 Static Factor - SF

The static factor is the ratio of the allowable ball or roller load to the actual ball or roller load. The static factor should be greater than one to assure some margin in the static capacity. The SF is linear in nature since it is based on load. An SF=1.5 means that the ball or roller load could be increased by a factor of 1.5 before it equals the static capacity or maximum allowable non-brinell load.

The static capacity is expressed in terms of the maximum Hertz contact stress. The static factor, SF, may be calculated from the maximum Hertz contact stress as:

For Point Contact - Four-Point Contact Ball Bearings:

$$SF = \left[\frac{609,000}{S\max} \right]^3 \qquad (English\ units) \tag{33}$$

$$SF = \left[\frac{4,200}{S\max} \right]^3 \qquad (SI\ Units) \tag{34}$$

For Line Contact - Cross Roller Bearings:

$$SF = \left[\frac{580,000}{S\max} \right]^2 \qquad (EnglishUnits) \tag{35}$$

$$SF = \left[\frac{4,000}{S\max} \right]^2 \qquad (SI\ Units) \tag{36}$$

It is sometimes necessary to calculate the ball or roller load when the maximum Hertz contact stress, Smax., is known. This is usually the case when applying the SF on the load.

For Point Contact - Four-Point Contact Ball Bearings:

$$Q = \left(\frac{c^2 a^* b^* p \ S\max}{1.5} \right)^3 \frac{1}{\sum r^2} \qquad (lbf \ or \ N)$$
$$c = 0.0045944 \, (eng)$$
$$c = 0.0236 \, (SI) \tag{37}$$

For Line Contact - Cross Roller Bearings:

$$Q = \frac{\left[c^1 p \ S\max \right]^2}{4 \sum r} \qquad (lbs \ or \ N)$$
$$c^1 = 0.00028692 \quad (eng)$$
$$c^1 = 0.00335 \qquad (SI) \tag{38}$$

7.4.6 Effect of Surface Hardness on Static Capacity

The static capacity is given for a case or surface hardness of HRC 58 minimum. The static capacity is reduced as hardness is reduced. Harris [9] gives this hardness reduction factor, fs, in terms of Vickers Hardness as:

$$f_s = f \left(\frac{HV}{800} \right)^2 \leq 1 \tag{39}$$

where: HV = Vickers hardness Number

ϕ = 1.5 Ball- Four-Point Contact Ball Brg.
ϕ = 2.0 Roller - Cross Roller Bearing

The hardness reduction of static capacity is also shown in Table 10. as a function of the Rockwell C Scale (HRC) surface hardness.

Table 10.
Effect of Surface Hardness on Static Capacity

HRC	HVN	Four-Point Ball	Cross Roller
58	660	1.000	1.000
56	620	0.901	1.000
55	600	0.844	1.000
50	500	0.586	0.781

7.5 Case - Core Interface Model

The four-point contact ball bearing and cross roller bearing designs (Figure 1) used as yaw and pitch bearings are case hardened to provide an RC 58 ball path or roller path surface hardness. The hardness decreases gradually to RC 50 and then decreases rapidly to the core hardness of the ring material. The depth below the surface to RC 50 hardness is called the <u>case depth.</u>

The application of a concentrated (Hertz contact) ball or roller load will result in significant subsurface shear stresses which reach down into the core material as illustrated in Figure 8.

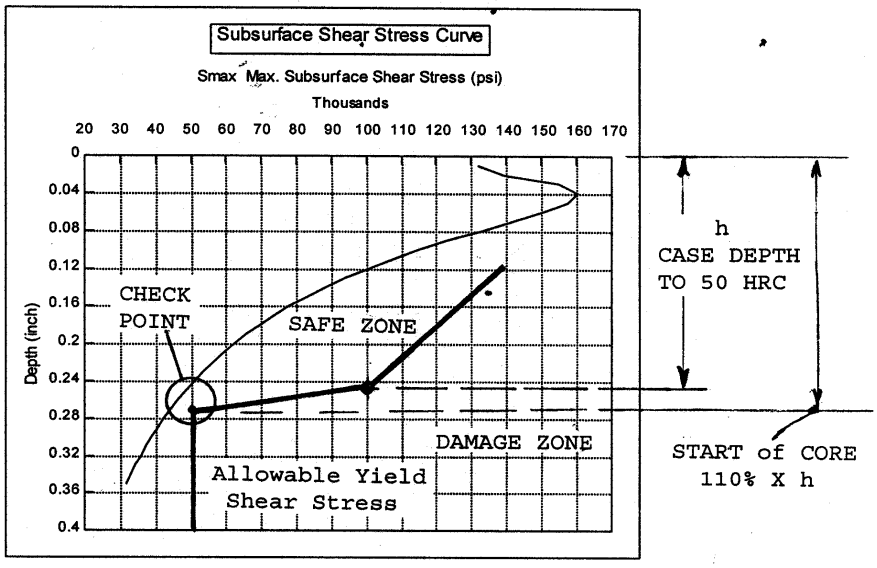

Figure 8.
Typical Subsurface Shear Stress Curve

If the subsurface shear stress, at the depth where the core hardness starts, exceeds the yield shear limit or the fatigue shear limit of the core material; deterioration of the core will result. Such deterioration will eliminate support for the hardened case material. Two types of failure may then occur. The core can be crushed by physically pressing the hardened case material into the core, or the core lack of support may cause the case to crack and disintegrate. The depth at which the core hardness starts may be estimated as 110% of the case depth as shown in Figure 8.

The shear stress considered is the maximum shear stress, $\tau 45$, which acts on a 45 degree plane and is one-half the difference between the maximum and minimum principal stresses acting at the point. The normal stresses acting at the center of a ball or roller contact are principal stresses. Sague and Rumbarger [10] use the maximum shear stress, $\tau 45$, and allowable yield and fatigue shear stresses. Zwirlein, et al, [11] uses the triaxial combined stress and the yield tension as an allowable. This is the Distortion Energy Hypothesis, DEH, approach. This Design Guide will use the maximum shear stress approach.

7.5.1 Allowable Yield Shear and Fatigue Shear

The allowable yield shear and the allowable fatigue shear stresses are given in Table 11. and shown in Figure 9. These allowable stress values cover a range of core hardness from 20 RC through 40 RC (226 BHN through 370 BHN). The formula for calculating the allowable shear stress is also given in Table 11.

Table 11.
Allowable Subsurface Shear Stresses

HRC	BHN	Yield Shear (KSI)	Fatigue Shear (KSI)
40	371	76.9	42.3
35	327	65.9	36.2
30	286	57.8	31.8
25	253	51.0	28.1
20	226	44.2	24.3
Yield Shear = Ult. Tension x 0.85 x 0.5 (KSI)			
Fatigue Shear = Yield Shear x 0.55 (KSI)			

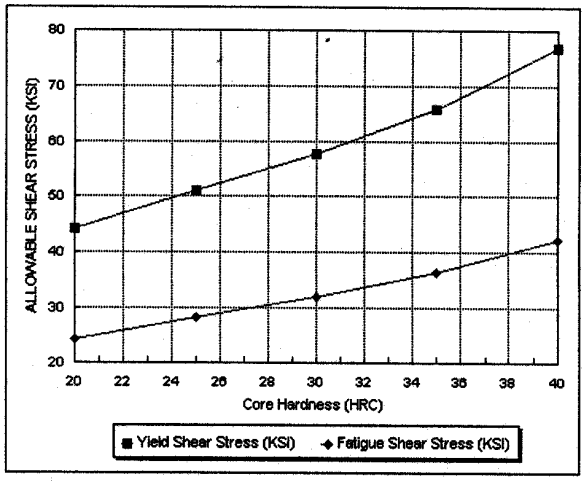

Figure 9.
Allowable Subsurface Shear Stresses

7.5.2 Calculation of Subsurface Shear Stress

Values for the parameter (SsΛ/b) as a function of the contact ellipse dimensions ratio, b/a, are given in Table 12. and Figure 10. The desired value of (SsΛ/b) is found by interpolation for the desired depth, z/b. The depth, z, is the depth to the start of the core hardness or 110% of the case depth as shown in Figure 8. The subsurface shear stress, at depth z/b, is then:

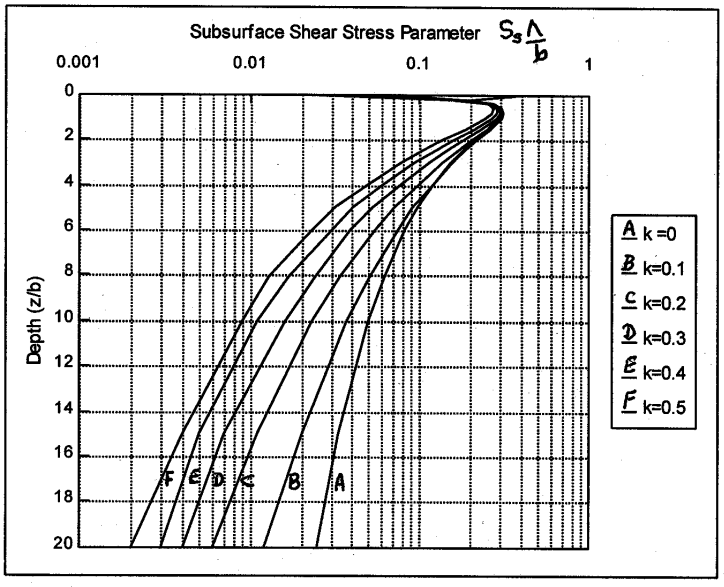

Figure 10.
Subsurface Shear Stress Parameter

$$S_s = \left(\frac{S_s \wedge}{b} \right) x \frac{b \sum r}{\left(1.2931 \, x \, 10^{-7}\right)} \qquad (PSI) \tag{40}$$

$$S_s = \left(\frac{S_s \wedge}{b} \right) \frac{b \sum r}{\left(1.8754 \, x \, 10^{-5}\right)} \qquad \left(MP_a \text{ or } N/mm^2 \right) \tag{41}$$

Table 12.
Subsurface Shear Stress Parameter

SUBSURFACE SHEAR STRESS Ss∧/b						
z/b	b/a 0.0	b/a 0.1	b/a 0.2	b/a 0.3	b/a 0.4	b/a 0.5
0.0	0.000	0.022	0.400	0.053	0.062	0.069
0.2	0.161	0.180	0.190	0.195	0.196	0.194
0.4	0.251	0.268	0.273	0.271	0.265	0.257
0.6	0.291	0.305	0.306	0.300	0.289	0.275
0.8	0.300	0.313	0.311	0.300	0.285	0.267
1.0	0.293	0.304	0.299	0.286	0.267	0.247
1.5	0.252	0.260	0.250	0.231	0.209	0.186
2.0	0.211	0.217	0.203	0.181	0.158	0.136
2.5	0.179	0.183	0.166	0.143	0.121	0.101
3.0	0.154	0.156	0.137	0.114	0.094	0.077
4.0	0.119	0.118	0.097	0.076	0.060	0.048
5.0	0.097	0.092	0.071	0.053	0.041	0.032
6.0	0.082	0.075	0.054	0.039	0.030	0.023
8.0	0.062	0.051	0.034	0.024	0.017	0.013
10.0	0.050	0.037	0.023	0.016	0.011	0.009
15.0	0.033	0.020	0.011	0.007	0.005	0.004
20.0	0.025	0.012	0.006	0.004	0.003	0.002
b/a = 0 for Line Contact						

7.5.3 Evaluation of Case - Core Interface

The case-core interface design criteria must be satisfied in addition to the life model and the static capacity model. Failure to satisfy the case-core criteria will affect the life and static capacity models.

The yield shear stress for the most heavily loaded element, Qmax.,under the ultimate or worst case loading condition, should be less than the allowable yield shear stress at the start of the core hardness (110% of the case depth). Failure to satisfy this condition will require a reduction in the Static Factor. (6.4.5). The allowable hertz contact stress for the static capacity (7.4) would need to be reduced to a value which would have a subsurface shear stress equal to the subsurface shear stress at the core boundary.

The subsurface shear stress for the maximum loaded element, Qmax., for the dynamic equivalent loads should be equal to or less than the fatigue shear stress. A reduction in the L10 or B10 fatigue life is indicated, if the subsurface shear stress exceeds the allowable fatigue shear stress at the core boundary. The life adjustment Factor, a3, would be:

$$a3 = \frac{\left(Allowable\ Fatigue\ Shear\ Stress\right)}{\left(Actual\ Fatigue\ Shear\ Stress\right)} \leq 1.0 \qquad (42)$$

7.6 Surface Model (Lubrication)

It is not possible to generate a meaningful oil film thickness in a slowly and intermittently moving (oscillating) yaw or pitch bearing. (Sect. 7.1.4)

A life adjustment factor (**a3 = 1.0**) is recommended for all wind turbine yaw and pitch bearing applications. This is based on the practical realization that any attempts to calculate a value less than one for the a3 factor (based on EHD theory) would seriously de-rate many successful field operating bearing systems.

A clean grease with good boundary lubrication additives (especially for oscillating conditions) should be selected on the basis of experience for wind turbine yaw and pitch bearings. A seal system (integral and/or external) is also essential for satisfactory operation.

A fretting corrosion type of rolling path surface failure is commonly encountered in yaw and pitch bearings. The fretting corrosion appears as elliptical or rectangular footprints at ball or roller spacing in the bearing. The markings are tiny corrosion pits caused by the lubricant being forced out of the contact (by a small load increase) and not being able to re-enter the contact zone. The unprotected surface is then subject to corrosion pitting. Most greases rated for oscillation use are capable of coating the racepaths and maintaining corrosion protection. In extreme cases, coating of the racepaths is an option. Thin dense chrome coating, TDC, increases bearing cost significantly but provides increased protection.

One manufacturer of wind turbine yaw and pitch bearings suggests the Hertz contact stress limits given in Table 13. as a means to limit fretting corrosion type of failures.

Table 13.
Hertz Contact Stress Limits

Operating Condition	Max Hertz Stress	
	SI Units) (N/mm^2) (MPa)	English (KSI)
Ultimate	3,200	464
Maximum Operating	2,800	406
Operating	2,400	348

7.7 Non-Rolling Items & Friction Torque

There are a number of important non-rolling items which can adversely affect yaw and pitch bearing service life if not properly satisfied. A partial list would include:

- Friction Torque
- External Bolting
- Cages or Separators
- Integral Seals

7.7.1 Friction Torque

A practical running friction torque estimate for yaw and pitch bearings is important to the equipment designer. The torque estimate suggested is conservative and will result in values which can be used for drive system or actuator design. The running torque estimate given below is for yaw and pitch bearings of the four-point contact ball bearing and cross roller bearing configurations. (Figure 1). These bearings include plastic spacers between the rolling elements and integral seals. The starting friction may exceed the running friction by as much as 1.5.

$$T_q = m \ \frac{dm}{2}\left[\frac{4.4M}{dm} + T + 2.2R\right] \qquad \left(in - lbf \ or \ N - m\right) \qquad (43)$$

Tq = Running Friction Torque. (in-lbs or N-m)

μ = 0.003 Four-Point Contact Ball Bearings

μ = 0.004 Cross Roller Bearings

7.7.2 External Bolting

The proper operation of yaw and pitch bearings requires that the external mounting bolts, Figures 2. & 3., have sufficient preload and strength to maintain the rings in contact with their mounting surfaces at all times. the maximum rolling element load, Qmax, is used (with proper consideration of the number of elements and the number of bolts) to determine the maximum bolt load.

A bibliography of bolted joint related technical papers is:

Gusovius, E., 1979, "Method of Designing Bolted Joints for Mounting Large Diameter Bearings", SAE Paper 790906.

Aaronson, S.F., (Rotek), 1982, "Analyzing Critical Joints", *Machine Design,* Jan. 21, 1982

VDI 2230, 1986, "Systematic Calculation of High Duty Bolted Joints with One Cylindrical Bolt", VDI Society for Product Development Guidelines., Germany

Radzimovsky, E. I., 1952, "Bolt Design for Repeated Loadings", *Machine Design,* Nov. 1952.

Baumgartner, T. C. and Kull, F. R., 1964, "Determining Preload in a Bolted Joint", Feb. 13, 1964.

7.7.3 Cages or Separators

Most yaw and pitch bearings are supplied with plastic spacers between each rolling element. A four-point contact ball bearing has cylindrical spacers with hemispherical indented ends. The cross roller bearing has plastic saddle type spacers which conform to the two adjacent rollers with axes of rotation 90 degrees apart. The ball spacers for larger balls (2" diameter and over) often have a steel plate reinforcement cast into the plastic.

Segmented cages are very rare for yaw and pitch bearings, since the opening between the races, required by the cage, significantly reduces the available load carrying ball path.

The bearing manufacturer should be consulted regarding spacer design. The spacer material must also be compatible with the selected lubricant.

7.7.4 Integral Seals

Wind turbine yaw and pitch bearings are usually supplied with integral rubbing lip seals. The bearing manufacturer should be consulted regarding material, design and placement of the integral seals. The seal material must be compatible with the selected lubricant.

8. Recommended Practices

APPENDIX A

YAW BEARING EVALUATION

EXAMPLE

IN ACCORDANCE WITH NREL DG03

CONTENTS

Section	Page
1.0 Introduction	1
2.0 Yaw Bearing Example	2
2.1 Yaw Bearing Type and Dimensions	*2*
2.2 Loads and Duty Cycle	*3*
3.0 Bearing Rotating Life	4
3.1 Dynamic Equivalent Loads, Moment and Speed	*4*
3.2 Thrust dynamic Capacity in Rotation	*5*
3.3 Dynamic equivalent Thrust Load, Pa	*6*
3.4 B10 Life	*6*
3.5 Life Adjustment Factors	*7*
4.0 Bearing Static Capacity	8
4.1 Maximum Roller Load	*8*
4.2 Contact Semi-Width, Hertz Stress and SF	*9*
5.0 Case-Core Interface	10
6.0 Surface Model	13
6.1 Suggested Hertz Contact Stress Limits	*13*
6.2 Lubrication, a3, Life Adjustment Factor	*13*
7.0 Friction Torque	14
8.0 Summary	15
A1 – Dyn EQ Load Case – General Computer Printout	
A2 – Limit Load Case – General Computer Printout	

LIST OF FIGURES

Figure	Page
1. Yaw Bearing Coordinates and Loads	1
2. Subsurface Shear Stress for Limit Load Case	12

LIST OF TABLES

Table	Page
1. Yaw Bearing Dimensions	2
2. Yaw Bearing Loads, Moments and Duty Cycle	3
3. Dynamic Equivalent Load Case	4
4. Thrust Dynamic Capacity for Rotation	5
5. B10 life in Rotation	6
6. Maximum Roller Load	8
7. Radii of Curvature	9
8. Hertz Stress and SF	10
9. Calculation of Subsurface Shear Stress, Ss	11
10. Suggested Hertz Contact Stress Limits	13
11. Estimated Running Friction Torque	14

1.0 Introduction

John H. Rumbarger, P.E., Inc., JHRINC, submitted Report C-0069-1 Rev. A (dated March 8, 2000) to the National renewable Energy Laboratory, NREL. Report C-0069-1 contained the methodology and detailed "how to" information for the life rating of wind turbine yaw and pitch bearings. This report uses the methodology to life rate a large diameter, cross roller bearing used as a yaw bearing. All equation numbers, figure numbers or table numbers, which are followed by an asterisk (*) NREL DG03.

The yaw bearing example will be evaluated using hand calculations and compared with a computer evaluated solution. The JHRINC computer program GENROL was used for the computer analysis check. Computer printout sheets are contained in the Appendix for reference. The dynamic equivalent load case is Appendix A. The limit load case is Appendix A-2.

The example yaw bearing coordinate system and the loads are shown in Figure 1. The wind turbine gearbox and nacelle are mounted to the top of the outer race. The outer race rotates at 0.285 RPM for life rating purposes. The lower surface of the inner race is mounted to a tubular or cylindrical type of tower. The inner race is stationary.

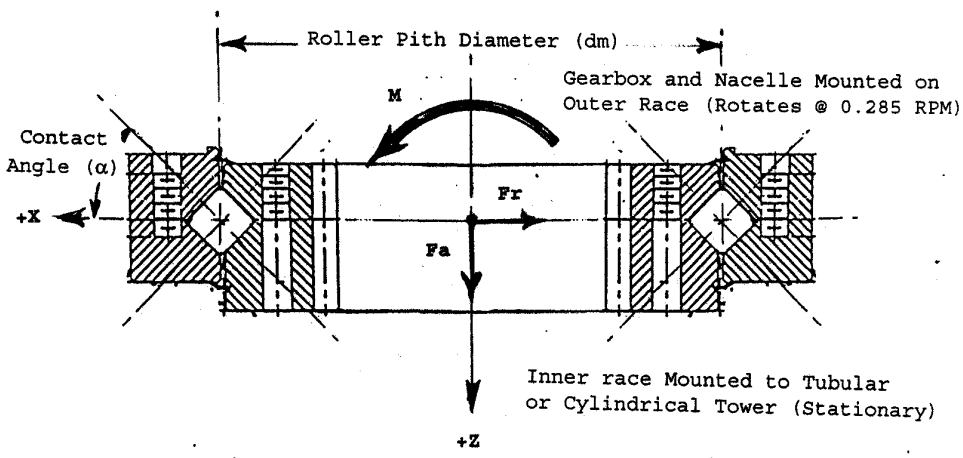

Figure 1.
Yaw Bearing Coordinates and Loads

2.0 Yaw Bearing Example

2.1 Yaw Bearing Type and Dimensions

The yaw bearing is a cross roller bearing with the dimensions and internal details defined in Table 1. The rollers in a cross roller bearing are oriented at a 45 degree contact angle as shown in Figure 1. Alternate rollers are changed in orientation. One-half of the rollers are oriented to carry an axial or thrust load. The other one-half of the rollers are oriented in the non-thrust direction.

Table 1.
Yaw Bearing Dimensions

CROSS ROLLER YAW BEARING		
Dimensions	Units	
Pitch Diameter	(Inch)	57.25
Roller Diameter	(Inch)	1.75
Roller Effective Length	(Inch)	1.50
Number of Rollers per Row		40
Contact Angle	(Degree)	45
Internal Diametral Clearance	(Inch)	0.005
Case - Core		
Roller Path Hardness	HRC	56 Min
Core Hardness	BHN	250 Min
Case Depth	(Inch)	0.180

2.2 Loads and Duty Cycle

The loads, moments and duty cycle are specified in Table 2. The loads were derived by the wind turbine designer from detailed load studies of (rainflow) cycles vs. load. (Refer to NREL DG01 for determination of wind turbine loads.) The loads are applied to the yaw bearing outer race as shown in Figure 1.

Table 2.
Yaw Bearing Loads, Moments and Duty Cycle

Load Case	Wind Speed (MPH)	% Time	Radial Load (Lbs) **Fr**	Thrust Load (Lbs) **Fa**	Moment (In-Lbs) **M**	e e=2m/dm/Fa **e**
1	14	32.0	6,877	50,800	789,760	0.543
2	20	16.0	11,900	50,800	1,578,000	1.085
3	26	15.0	12,850	50,800	2,067,800	1.422
4	30	20.0	11,800	50,800	2,223,700	1.529
5	40	15.0	9,200	50,800	2,417,300	1.662
6	50	2.0	8,100	50,800	2,653,200	1.825
		100.0	%			
Limit Load			33,235	50,800	21,500,000	14.785

Loads and Moments Applied to Outer Race
Outer Race is Stationary with respect to Loads
Outer Race Rotates @ 0.285 RPM
Yaw Bearing Mounted on Tubular or Cylindrical Tower

B10 Design Life = 20 Years @ 4,368 Hours per Year (50% Use) = 87,360 Hours

3.0 Bearing Rotating Life

3.1 Dynamic Equivalent Loads, Moment and Speed

The six individual load cases specified in Table 2. may be reduced to one set of Dynamic Equivalent Loads using equation (20*). This simplifies the B10 life calculation to one set of loads moments and speed. The speed is specified (Table 2.) as a constant 0.285 RPM for the purposes of life rating the yaw bearing. No oscillation data (amplitude or speed) was provided.

The Dynamic Equivalent Load case is given in Table 3.

$$P_E = \left(\frac{P_1^{10/3} t_1 + P_2^{10/3} t_2 + \ldots . P_n^{10/3} t_n}{t_1 + t_2 + \ldots . t_n} \right)^{3/10} \quad (Lbs \ or \ In - Lbs) \qquad (20^*)$$

$$t_n = Percent\ Time$$

Table 3.
Dynamic Equivalent Load Case

Speed (RPM)	Radial Load (Lbs) **Fr**	Thrust Load (Lbs) **Fa**	Moment (In-Lbs) **M**	e e=2m/dm/Fa **e**	Pa Dyn Eq Th (Lbs) **Pa**
0.285	10,547	50,800	1,920,086	1.320	125,788

3.2 Thrust Basic Dynamic Capacity in Rotation

The thrust Basic Dynamic Capacity, Ca, for a rotating thrust roller bearing calculated from the AFBMA or ISO standards using equation (4*) and Table (2*) is 356,791 Lbs. per Table 4. The computer printout sheet, Appendix A-1shows 354,140 Lbs.

$$Ca = fcm \left(le \cos \propto \right)^{7/9} Z^{3/4} d^{29/27} \tan \propto \quad (lbs \ or \ N) \qquad (4)$$

Table 4.
Thrust Dynamic Capacity for Rotation

Roller Diam	d	Inch	1.75	
Pitch Diameter	dm	Inch	57.25	
Contact Angle	A	Degree	45	
No. of Rollers/row	Z		40	
Roller Effective Length	le	Inch	1.5	
Gamma=d*Cos(A)/dm	G		0.0216	
Determine fcm	G	fcm		Table 2*
	0.0200	11,577		
	0.0300	12,641		
fcm for G=0.0216	0.0216	11,747		
Dynamic Thrust Capacity				Eq. (2*)
(le*Cos(A))^7/9			1.047	
Z^0.75			15.905	
d^29/27			1.824	
Tan(a)			1.000	
Basic Dynamic Capacity	Ca	Lbs.	356,791	

3.3 Dynamic Equivalent Thrust Load, Pa

The Dynamic equivalent Thrust Load, Pa, is calculated using equation (7*). The loads and moment for the Dynamic Equivalent Load Case, Table 3., are used to determine Pa.

$$P_a = \left(0.75F_r + F_a + \frac{2M}{dm} \right) \qquad (LBS\ or\ N) \quad (7)$$

Pa = 125,788 Lbs. per Table 3.

3.4 B10 Life

The B-10 life (using the dynamic equivalent thrust load, Pa, Table 3.) is calculated using equations (8-11*). The B10 life in rotation @ 0.285 RPM is 1,059,780 hours as given in Table 5. This compares well with the computer result of 1,033,400 hours (Appendix A-1). The B10 life far exceeds the required 87,360 hours.

$$B_{10} = a_1 a_2 a_3 \left(\frac{Ca\,ROT}{Pa} \right) \frac{10^6}{60\,RPM} \qquad (Hours) \quad \text{(8* - 11*)}$$

Table 5.
B10 Life in Rotation

Basic Thrust Dynamic Capacity Dynamic Equivalent Thrust Load Life = (Ca/Pa)^10/3	Ca Pa L10	(Lbs) (Lbs) (mr)	356,791 125,788 32.30	(4*) (7*) (9*)
Life Adjustment Factors Reliability Properties - Racepath 56 HRC Structures Effects	 a1 a2 a3		 1 0.66 0.85	 Table 3.* (12*) Table 5.*
Adj. L10 = a1*a2*a3*L10	Lna	(mr)	18.12	(10*)
Rotating B10=Lna*!.0e+6/60/rpm	B10	(Hours)	1,059,780	(11*)
* NREL DG03				

3.5 Life Adjustment Factors

The Life Adjustment Factor for reliability was selected from Table 3* as a1=1.0 for the 10% failure rate or 90% reliability. The calculated B10 life of 1,059,780 hours (Table 5.) far exceeds the required 87,360 hours (Table 2.) The yaw bearing can achieve the required 87,360 hours at a much higher reliability probability.

a1 = (87,360)/(1,059,780) = 0.08

The yaw bearing (Table 3*) has an L(0.2) or 99.8% reliability probability (0.2% failure probability).

The bearing material specification, Table 1., defines a roller path surface hardness of 56 RC minimum. The life rating standards are based on a roller path hardness of 58 RC minimum. The a2 life adjustment factor for material properties is used to account for the reduced B10 life due to the reduced roller path hardness. (a2 = 0.66 per equation (12*).)

$$a_2 = \left[\left(\frac{56RC}{58RC} \right)^{3.6} \right]^{10/3} = 0.66 \qquad (12^*)$$

The a3 life adjustment factor is to account for lubrication and other operating conditions.

An a3 = 1.0 factor is recommended for lubrication. The bearing is sealed with integral seals and lubricated with a wear resistant grease.

The effect of the mounting structures can be to shorten the anticipated B10 fatigue life. The transition from a tubular or cylindrical type tower (good circumferential load distribution) to a rectangular deck and transmission gearbox platform can introduce hard spots in the structure. The structural hard spots will raise or peak the maximum roller loads to higher values than would be experienced under ideal load distribution conditions.

a3 = 0.85 (Table 5*)

4.0 Bearing Static Capacity

4.1 Maximum Roller Load

The yaw bearing static capacity is based on the maximum Hertz contact stress at the center of the most heavily loaded roller, Qmax. The maximum Hertz contact stress should not exceed 580,000 psi (Table 6*) for a roller bearing. There is no reduction in the static capacity for the roller-race contact because of the 56 HRC minimum roller path hardness. Table 10* and equation (39*) show that fs = 1.0.

The maximum roller load, Qmax, is calculated using equation (21*) and is shown in Table 6. for the dynamic equivalent load case and the limit load cases.

$$Q\max = \left(\frac{2Fr}{Z\cos\propto} + \frac{Fa}{Z\sin\propto} + \frac{4M}{dmZ\sin\propto} \right) \qquad (Lbs\ or\ N) \qquad (21)$$

Table 6.
Maximum Roller Load

Load Case	**Fr** (Lbs)	**Fa** (Lbs)	**M** (In-Lbs)	**Qmax** (Lbs)
Dyn Equiv Load	10,547	50,800	1,920,086	7,285
Limit Load	33,235	50,800	21,500,000	57,256
Z = 40 Rollers/ Row dm = 57.25" Pitch Diameter				

4.2 Contact Semi-Width, Hertz Stress and SF

The semi-width, b, of the contact rectangle is dependent upon the summation of curvatures of the roller and the racepath. The principal radii of curvature are described in Table 9* and are shown in Table 7. The contact semi-width, b, is calculated per equation (31*).

$$b = 0.00028692\left(\frac{Q}{le\sum r}\right)^{1/2} \qquad (inch) \qquad (21)$$

Table 7.
Radii of Curvature

Rho(a)	Rho(b) Inner Race	Sum Rho	
+2/d	+1/(dm/2Cos -d/2)	Rho(a) + Rho(b)	
1.1429	0.0252	1.1681	Table 9*

The Hertz contact stress is calculated using equation (23 *). The static factor SF is calculated using equation (35*). The results are given in Table 8. The SF=1.53 shows that the yaw bearing has a satisfactory static capacity under the limit load conditions.

$$S\max = \frac{4}{p}\frac{Q\max}{2ble} \qquad (lbs\ or\ N) \tag{23}$$

$$SF = \left[\frac{580,000}{S\max}\right]^2 \qquad (English\ Units) \tag{35}$$

Table 8.
Hertz Stress and SF

Load Case	Qmax (Lbs)	b (Inch)	Smax Hertz (psi)	SF Static Factor
Dyn Equiv. Load	7,285	0.0185	167,120	12.04
Limit Load	57,256	0.0519	468,516	1.53
Sum Rho = 1.1681 le = 1.50"				

5.0 Case - Core Interface

The subsurface shear stress at any depth may be calculated using equation (40*). The stress, Ss, is a function of the dimensionless parameter, Ss(Λ)/b (for a b/a=0) from Table 12*.

$$S_s = \left(\frac{S_s \wedge}{b}\right) x \frac{b\sum r}{\left(1.2931 x 10^{-7}\right)} \qquad (PSI) \tag{40}$$

The calculation of Ss for the Limit Load case and the Dynamic equivalent Load case are given in Table 9. The subsurface shear stress, Ss, is calculated for a depth of 0.200" below the surface. This depth is representative of the start of the core hardness and is 110% of the case depth, Table 1.

The allowable values for the subsurface shear stress, Ss, are given in Table 11* and Figure 9* as a function of the minimum core hardness. The yield allowable shear stress is 51,000 psi, and the fatigue allowable shear stress is 28,000 psi for a core hardness of 250 BHN minimum.

Table 9.
Calculation of Subsurface Shear Stress, Ss

Specifications	Value		Units	Reference
Core Hardness (Minimum)	250 BHN			Table 1
Case Depth (Minimum)	0.180		(inch)	Table 1
Start of Core - 110% Depth	0.200		(inch)	Table 1
Allowable Yield Shear	51,000		(psi)	Table 11*
Allowable Fatigue Shear	28,000		(psi)	Table 11*
	Limit Load	Dyn Eq. Load		
Calculated Values				
Smax = Hertz Stress	468,516	167,120	(psi)	Table 8
b=contact semi-width	0.0519	0.0185	(inch)	Table 8
b/a = ratio ellipse axes	0	0		
Sum Rho	1.1681	1.1681	(1/inch)	Table 7
Subsurface Shear Parameter Ss(Lambda)/b				
z/b @ start of core =	3.854	10.811		
z/b	Ss(Lam)/b	Ss(Lam)/b	z/b	
3.000	0.1540	0.0500	10.000	Table 12*
4.000	0.1190	0.0330	15.000	Table 12*
Ss(Lambda)/b for z/b= 3.85	0.1241	0.0472	10.811	Table 12*
Subsurface Shear Stress at Start of Core, Ss				
Ss=[Ss(lam)/b]*b*Sum Rho/C	58,193	7,895		Eq.(40*)
Allowable Shear Stress (psi)	51,000 Yield	28,000 Fitigue		Table 11*
Status of Case Depth	Too Shallow	OK		
Required Min. Case Depth	0.250"			
* Report C-0069-1				

The calculated subsurface shear stress, Ss, for the limit load case is 58,193 psi at a depth of 0.200". Thus, Ss exceeds the allowable shear yield stress and is not acceptable. Core crushing or cracking of the core material is possible, Either a higher core hardness or a deeper case depth need to be specified in order to achieve an allowable shear yield stress which is greater than 58,000 psi. The subsurface shear stress for the Limit Load condition is shown as

Figure 2.

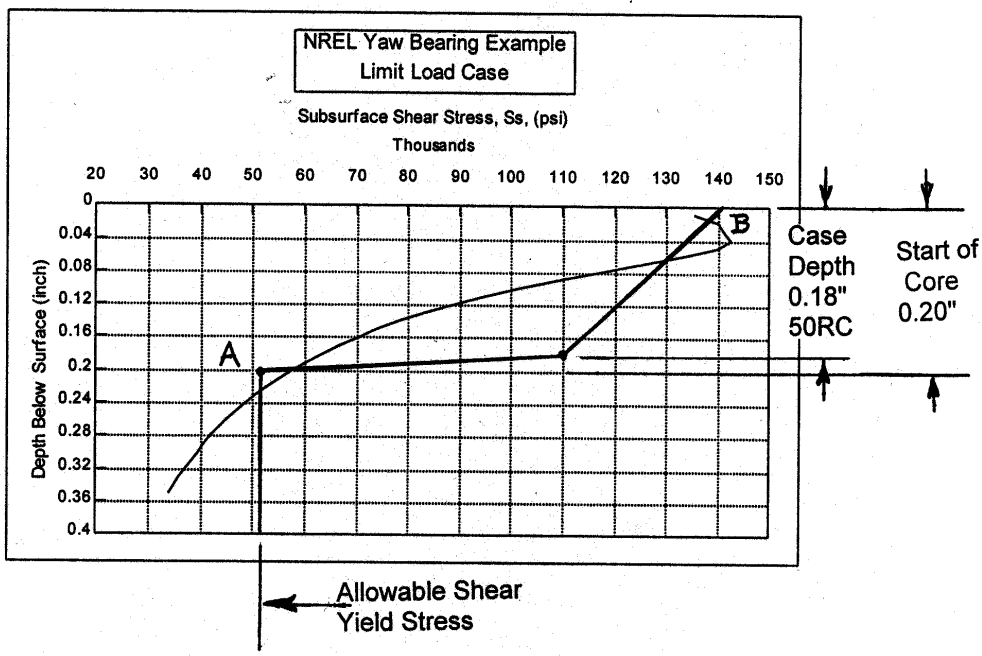

Figure 2.
Subsurface Shear Stress for Limit Load Case

Note that in Figure 2., the subsurface shear stress, Ss, curve is greater than the allowable shear yield stress at the start of the core hardness (Region A).

Also note that the subsurface shear stress seems to exceed the allowable yield shear stress curve in the hardened case (Region B). The case-core theory [Reference 10*] only applies to the case-core boundary and the core material. The hard case material (from the surface down to a hardness of 50 HRC) is in a state of tri-axial compression and a state of high residual compressive stress exists. This compressive pre-stress in the case reduces the magnitude of the subsurface shear stress, Ss. The stress peak shown in Figure 2. at a depth of 0.040" does not exist.

The calculated subsurface shear stress, Ss, is only 7,895 psi (at a depth of 0.200") for the Dynamic Equivalent Load case.(Table 9.) The case-core interface is satisfactory from a fatigue standpoint.

6.0 Surface Model

6.1 Suggested Hertz Contact Stress Limits

The calculated Hertz contact stresses, Table 10. agree with the suggested limits to avoid "fretting corrosion" type of failure.

Table 10.
Suggested Hertz Contact Stress limits

Calulated Contact Stress		Suggested Limits		Status SF
Load Case	Max Hertz (psi)	Loading	Max Hertz (psi)	(Rec/Calc)^2
Limit Load	468,516	Ultimate	464,000	0.98
Dyn Eq. Ld.	167,120	Operating	348,000	4.34

6.2 Lubrication , a3, Life Adjustment Factor

A lubricant selection has not been included with this pitch bearing rating example. The selected grease should be one recommended for oscillating motion conditions. The grease should also have excellent anti-wear and extreme pressure additive characteristics. Frequent (daily) movement of the yaw bearing through a large angle (90 degrees) is recommended to redistribute grease to the rollers and roller path surfaces.

An a3 = 1.0 Life Adjustment Factor for lubrication is recommended.

7.0 Friction Torque

The estimated rolling friction torque is calculated using equation (43*). Starting friction torque or a change in friction torque with a reversal of yaw bearing motion may be 1.5 times the running torque. Estimated running torque values are given in Table 11.

The estimated running friction torque is conservatively high for the purpose of sizing drives and actuators. The actual running friction torque may be less than the estimated maximums. The torque estimates include integral seal drags, spacer drag, etc.

$$T_q = m\frac{dm}{2}\left[\frac{4.4M}{dm} + T + 2.2R\right] \qquad (M - lbs \;\; or \;\; N - m) \quad (43)$$

Table 11.
Estimated Running Friction Torque

Load Case	Radial **Fr** (Lbs)	Thrust **Fa** (Lbs)	Moment **M** (in-Lbs)	Run Torque **Tq** (in-Lbs)	Run Torque **Tq** (Ft-Lbs)
Dyn Eq. Ld.	10,547	50,800	1,920,086	25,370	2,114
Limit Load	33,235	50,800	21,500,000	203,388	16,949
dm = 57.25" Pitch diameter u = 0.004 Coefficient of Running Friction					

8.0 Summary

The yaw bearing example, Table 1. and figure 1. operating under the loads and duty cycle, Table 2. has been evaluated in accordance with the NREL Guideline DG03.

The yaw bearing does **not** satisfy the case-core criteria guide line. Either the core hardness should be increased or the case depth should be increased. A minimum case depth of 0.200 inch with a 250 BHN minimum core hardness (for example) would satisfy the case-core design criteria.

The yaw bearing meets or exceeds all of the remaining design criteria.

- B10 Life in Rotation
- Static Capacity
- Satisfactory Lubrication
- Non-Rolling Items

The hand calculations are in good agreement with the GENROL computer analysis for the case of zero internal diametral clearance. The use of computer evaluation is recommended for cases involving bearing diametral looseness or preload and for special mounting conditions.

APPENDIX A-1

GENROL Computer Printout Sheets

for

DYNAMIC EQUIVALENT LOAD CASE

**ENGLISH UNITS

JOHN H. RUMBARGER, P.E., INC.
(610) 489-6904
8 KENNEY LANE, COLLEGEVILLE, PA 19426

GENROL ROLLING ELEMENT BEARING ANALYSIS PROGRAM (5 DEGREES OF FREEDOM)
ALONG X, ALONG Y, ALONG Z, ABOUT X, ABOUT Y

NREL YAW BEARING EXAMPLE - DYNAMIC EQUIVALENT LOAD CASE - APPENDIX A -1

INPUT DATA FOR INDIVIDUAL BEARINGS

BEARING NO.	TYPE OF BEARING	NUMBER OF ELEMENTS	ELEMENT DIA. (IN)	PITCH DIA. (IN)	CONTACT ANGLE (DEG)	RACE CURVATURES OUTER (%)	RACE CURVATURES INNER	DIAMETRAL CLEAR. (IN)	BEARING LOC. (IN)
1	ROLLER	40	1.7500E+00	5.7250E+01	4.5000E+01	0.0000E+00	0.0000E+00	0.0000E+00	0.0000E+00
2	ROLLER	40	1.7500E+00	5.7250E+01	-4.5000E+01	0.0000E+00	0.0000E+00	0.0000E+00	0.0000E+00

BEARING NO.	ROLL LENGTH (EFF. IN)	MODULUS OF ELASTICITY RACE (PSI)	MODULUS OF ELASTICITY ELEMENT	POISSONS RATIO RACE	POISSONS RATIO ELEMENT	FATIGUE CONSTANT OUTER	FATIGUE CONSTANT INNER	VALUES OF LAMBDA OUTER	VALUES OF LAMBDA INNER
1	1.5000E+00	3.0000E+07	3.0000E+07	2.5000E-01	2.5000E-01	4.9500E+04	4.9500E+04	5.4000E-01	5.4000E-01
2	1.5000E+00	3.0000E+07	3.0000E+07	2.5000E-01	2.5000E-01	4.9500E+04	4.9500E+04	5.4000E-01	5.4000E-01

BEARING NO.	INITIAL DISPLACEMENTS AT BEARING CENTER ALONG X (IN)	ALONG Y (IN)	ALONG Z (IN)	ABOUT X (RAD)	ABOUT Y (RAD)	AXIAL PRELOAD (LB)	PRELOAD DEFLECTION (IN)	PRELOAD CONTACT ANG. (DEG)	PHASE ANGLE (%)
1	0.0000E+00	0.0000E+00	0.0000E+00	0.0000E+00	0.0000E+00	0.0000E+00	0.0000E+00	0.0000E+00	0.0000E+00
2	0.0000E+00	0.0000E+00	0.0000E+00	0.0000E+00	0.0000E+00	0.0000E+00	0.0000E+00	0.0000E+00	0.0000E+00

BEARING NO.	WEIBULL SLOPE	LOAD-LIFE EXPONENT	AXIAL FLOAT	RADIAL FLOAT	ETA (DEG)	CONE RIB DIA. (IN)	SHOULDER CLEARANCE EC1 (IN)	SHOULDER CLEARANCE EC2	DESIGN H/D OUTER
1	1.1250E+00	3.3300E+00	NO	NO	0.0000E+00	0.0000E+00	0.0000E+00	0.0000E+00	0.0000E+00
2	1.1250E+00	3.3300E+00	NO	NO	0.0000E+00	0.0000E+00	0.0000E+00	0.0000E+00	0.0000E+00

BEARING NO.	CAGE OPENING (IN)	AXIAL SPRING	ROLL CYLN. LENGTH (IN)	CROWN (IN or RAD)	BALL EXP.	LIFE ADJUSTMENT FACTORS RELIABILITY	MATERIAL	LUBRICATION	DESIGN H/D INNER
1	0.0000E+00	NO	0.0000E+00	0.0000E+00	.00	1.0000E+00	6.6000E-01	8.5000E-01	0.0000E+00
2	0.0000E+00	NO	0.0000E+00	0.0000E+00	.00	1.0000E+00	6.6000E-01	8.5000E-01	0.0000E+00

ROW 1 HAS 40 ELEMENTS AND WAS MODELED WITH 40 ELEMENTS

ROW 2 HAS 40 ELEMENTS AND WAS MODELED WITH 40 ELEMENTS

INPUT DATA FOR BEARING SYSTEM

EXTERNAL FORCES AND MOMENTS APPLIED TO SHAFT

RPM (RELATIVE)	OPM (OSC/MIN)	AMPL OSC (DEG)	ALONG X F1 (LB)	ALONG Y F2 (LB)	ALONG Z F3 (LB)	ABOUT X F4 (LB-IN)	ABOUT Y F5 (LB-IN)
2.8500E-01	1.6667E-02	0.0000E+00	1.0547E+04	0.0000E+00	-5.0800E+04	0.0000E+00	1.9201E+06

INNER RACES ROTATE WITH RESPECT TO LOAD
OUTER RACES STATIONARY WITH RESPECT TO LOAD
PROBLEM IS POSED IN FOLLOWING DEGREES OF FREEDOM
ALONGX,ALONGZ,ABOUTY,

ESTIMATE OF BEARING INNER RACE FRICTION TORQUE BASED ON
A COEFFICIENT OF TRACTION TIMES THE SUM OF THE BALL OR ROLLER LOADS

SYSTEM FRICTION TORQUE (IN-LBS) = 1.8199E+04
(FT-LBS) = 1.5166E+03
(HP) = 8.2329E-02

BRG NO.	SUM OF ELEM LOADS (LBS)	FRICTION TORQUE (IN-LBS)	FRICTION TORQUE (FT-LBS)	SHAFT (HP)	SHAFT (RPM)	TRACTION COEFFICIENT
1	1.1715E+05	1.3124E+04	1.0937E+03	5.9370E-02	2.8500E-01	4.0000E-03
2	4.5304E+04	5.0752E+03	4.2293E+02	2.2959E-02	2.8500E-01	4.0000E-03

ENGLISH UNITS

OUTPUT DATA FOR BEARING SYSTEM NUMBER OF ITERATIONS = 4

**** LIFE COMPUTED PER AFBMA STANDARDS ****

SYSTEM REACTIONS ON SHAFT AT ORIGIN

HOURS LIFE (B-10)	ALONG X (LB)	ALONG Y (LB)	ALONG Z (LB)	ABOUT X (LB-IN)	ABOUT Y (LB-IN)
1.0334E+06	-1.0544E+04	1.0416E-03	5.0803E+04	1.4759E-01	-1.9200E+06

DISPLACEMENTS OF REFERENCE LINE AT ORIGIN

ALONG X (IN)	ALONG Y (IN)	ALONG Z (IN)	ABOUT X (RAD)	ABOUT Y (RAD)
-1.3306E-03	0.0000E+00	-1.5058E-03	0.0000E+00	9.0301E-05

NON-LINEAR SPRING RATES OF SYSTEM AT ORIGIN

DFX/DX (LB/IN)	DFX/DY (LB/IN)	DFX/DZ (LB/IN)	DFX/DALX (LB/RAD)	DFX/DALY (LB/RAD)	DFY/DY (LB/IN)	DFY/DZ (LB/IN)	DFY/DALX (LB/RAD)
-4.5292E+07	0.0000E+00	2.4330E+07	0.0000E+00	-4.0105E+08	0.0000E+00	0.0000E+00	0.0000E+00

NON-LINEAR SPRING RATES (CONTINUED)

DFY/DALY (LB/RAD)	DFZ/DZ (LB/IN)	DFZ/DALX (LB/RAD)	DFZ/DALY (LB/RAD)	DMX/DALX (LB-IN/RAD)	DMX/DALY (LB-IN/RAD)	DMY/DALY (LB-IN/RAD)
0.0000E+00	-8.2717E+07	0.0000E+00	-3.4957E+08	0.0000E+00	0.0000E+00	-3.7112E+10

REACTIONS OF BEARINGS ON SHAFT

BEARING NO.	ALONG X (LB)	ALONG Y (LB)	ALONG Z (LB)	ABOUT X (LB-IN)	ABOUT Y (LB-IN)
1	-3.8809E+04	1.8383E-03	8.2838E+04	1.6336E-01	-1.0869E+06
2	2.8265E+04	-7.9669E-04	-3.2035E+04	-1.4137E-02	-7.9160E+05

RELATIVE SHAFT DISPLACEMENTS AT BEARING CENTER

BEARING NO.	ALONG X (IN)	ALONG Y (IN)	ALONG Z (IN)	ABOUT X (RAD)	ABOUT Y (RAD)
1	-1.2748E-03	0.0000E+00	-1.5059E-03	0.0000E+00	9.0300E-05
2	-1.3866E-03	0.0000E+00	-1.5059E-03	0.0000E+00	9.0300E-05

BEARING NO.	HOURS LIFE (B-10)	CAPACITY (LB)		EQUIVALENT LOAD (LB)	ISO FACTOR ON CAPACITY
1	1.2949E+06	3.5414E+05	(THRUST)	1.1744E+05	1.0000E+00
2	3.9046E+06	3.5414E+05	(THRUST)	8.4308E+04	1.0030E+00

1 OUTPUT DATA FOR BEARING NO. 1 ROLLER BEARING **ENGLISH UNITS*

SKF ROLLER DEFLECTION ALGORITHM USED

OUTPUT EDIT FOR MAXIMUM LOADED ROLLING ELEMENT

ROLLER NO.	LOCATION ANGLE (DEG)	ROLL LOAD (LB)	CONTACT AREA SEMI-WIDTH OUTER (IN)	CONTACT AREA SEMI-WIDTH INNER	HERTZ CONTACT STRESS OUTER (MAX.)	HERTZ CONTACT STRESS INNER	MAXIMUM SHEAR STRESS OUTER (PSI)	MAXIMUM SHEAR STRESS INNER
40	3.6000E+02	5.7843E+03	1.6562E-02	1.6208E-02	1.4822E+05	1.5146E+05	4.4504E+04	4.5477E+04

ROLLER NO.	DEPTH TO MAXIMUM SHEAR OUTER (IN)	DEPTH TO MAXIMUM SHEAR INNER	MAX ORTHOGONAL SHEAR OUTER (PSI)	MAX ORTHOGONAL SHEAR INNER	DEPTH TO ORTH. SHEAR OUTER (IN)	DEPTH TO ORTH. SHEAR INNER
40	1.3020E-02	1.2741E-02	3.7056E+04	3.7866E+04	8.2812E-03	8.1041E-03

NUMBER OF UNLOADED ROLLERS = 0

NUMBER OF LOADED ROLLERS = 40

1 OUTPUT DATA FOR BEARING NO. 1 ROLLER BEARING **ENGLISH UNITS**

SKF ROLLER DEFLECTION ALGORITHM USED

ROLLER NO.	LOCATION ANGLE (DEG)	ROLL LOAD (LB)	CONTACT AREA SEMI-WIDTH OUTER (IN)	CONTACT AREA SEMI-WIDTH INNER	HERTZ CONTACT STRESS OUTER (MAX.)	HERTZ CONTACT STRESS INNER	MAXIMUM SHEAR STRESS OUTER (PSI)	MAXIMUM SHEAR STRESS INNER
1	9.0000E+00	5.7458E+03	1.6507E-02	1.6154E-02	1.4773E+05	1.5096E+05	4.4356E+04	4.5325E+04
2	1.8000E+01	5.6312E+03	1.6342E-02	1.5992E-02	1.4625E+05	1.4944E+05	4.3911E+04	4.4871E+04
3	2.7000E+01	5.4442E+03	1.6068E-02	1.5724E-02	1.4380E+05	1.4694E+05	4.3176E+04	4.4119E+04
4	3.6000E+01	5.1905E+03	1.5689E-02	1.5354E-02	1.4041E+05	1.4348E+05	4.2158E+04	4.3079E+04
5	4.5000E+01	4.8780E+03	1.5210E-02	1.4884E-02	1.3612E+05	1.3909E+05	4.0869E+04	4.1762E+04
6	5.4000E+01	4.5162E+03	1.4635E-02	1.4322E-02	1.3097E+05	1.3383E+05	3.9324E+04	4.0184E+04
7	6.3000E+01	4.1160E+03	1.3971E-02	1.3672E-02	1.2503E+05	1.2777E+05	3.7542E+04	3.8362E+04
8	7.2000E+01	3.6894E+03	1.3227E-02	1.2945E-02	1.1838E+05	1.2096E+05	3.5543E+04	3.6320E+04
9	8.1000E+01	3.2489E+03	1.2413E-02	1.2147E-02	1.1109E+05	1.1351E+05	3.3354E+04	3.4083E+04
10	9.0000E+01	2.8072E+03	1.1538E-02	1.1291E-02	1.0326E+05	1.0552E+05	3.1004E+04	3.1681E+04
11	9.9000E+01	2.3765E+03	1.0616E-02	1.0389E-02	9.5008E+04	9.7084E+04	2.8526E+04	2.9149E+04
12	1.0800E+02	1.9682E+03	9.6613E-03	9.4547E-03	8.6463E+04	8.8352E+04	2.5961E+04	2.6528E+04
13	1.1700E+02	1.5927E+03	8.6908E-03	8.5049E-03	7.7778E+04	7.9477E+04	2.3353E+04	2.3863E+04
14	1.2600E+02	1.2584E+03	7.7250E-03	7.5598E-03	6.9134E+04	7.0645E+04	2.0758E+04	2.1211E+04
15	1.3500E+02	9.7187E+02	6.7889E-03	6.6437E-03	6.0757E+04	6.2085E+04	1.8242E+04	1.8641E+04
16	1.4400E+02	7.3751E+02	5.9140E-03	5.7875E-03	5.2927E+04	5.4084E+04	1.5891E+04	1.6239E+04
17	1.5300E+02	5.5727E+02	5.1408E-03	5.0308E-03	4.6007E+04	4.7012E+04	1.3814E+04	1.4115E+04
18	1.6200E+02	4.3089E+02	4.5205E-03	4.4238E-03	4.0456E+04	4.1340E+04	1.2147E+04	1.2412E+04
19	1.7100E+02	3.5657E+02	4.1122E-03	4.0242E-03	3.6801E+04	3.7606E+04	1.1050E+04	1.1291E+04
20	1.8000E+02	3.3212E+02	3.9687E-03	3.8838E-03	3.5517E+04	3.6294E+04	1.0664E+04	1.0897E+04
21	1.8900E+02	3.5657E+02	4.1122E-03	4.0242E-03	3.6802E+04	3.7606E+04	1.1050E+04	1.1291E+04
22	1.9800E+02	4.3089E+02	4.5205E-03	4.4238E-03	4.0456E+04	4.1340E+04	1.2147E+04	1.2412E+04
23	2.0700E+02	5.5727E+02	5.1408E-03	5.0308E-03	4.6007E+04	4.7012E+04	1.3814E+04	1.4115E+04
24	2.1600E+02	7.3751E+02	5.9140E-03	5.7875E-03	5.2927E+04	5.4084E+04	1.5891E+04	1.6239E+04
25	2.2500E+02	9.7187E+02	6.7889E-03	6.6437E-03	6.0757E+04	6.2085E+04	1.8242E+04	1.8641E+04
26	2.3400E+02	1.2584E+03	7.7250E-03	7.5598E-03	6.9134E+04	7.0645E+04	2.0758E+04	2.1211E+04
27	2.4300E+02	1.5927E+03	8.6908E-03	8.5050E-03	7.7778E+04	7.9477E+04	2.3353E+04	2.3863E+04
28	2.5200E+02	1.9682E+03	9.6613E-03	9.4547E-03	8.6463E+04	8.8352E+04	2.5961E+04	2.6528E+04
29	2.6100E+02	2.3765E+03	1.0616E-02	1.0389E-02	9.5008E+04	9.7084E+04	2.8526E+04	2.9149E+04
30	2.7000E+02	2.8072E+03	1.1538E-02	1.1291E-02	1.0326E+05	1.0552E+05	3.1004E+04	3.1681E+04
31	2.7900E+02	3.2489E+03	1.2413E-02	1.2147E-02	1.1109E+05	1.1351E+05	3.3354E+04	3.4083E+04
32	2.8800E+02	3.6894E+03	1.3227E-02	1.2945E-02	1.1838E+05	1.2096E+05	3.5543E+04	3.6320E+04
33	2.9700E+02	4.1160E+03	1.3971E-02	1.3672E-02	1.2503E+05	1.2777E+05	3.7542E+04	3.8362E+04
34	3.0600E+02	4.5162E+03	1.4635E-02	1.4322E-02	1.3097E+05	1.3383E+05	3.9324E+04	4.0184E+04
35	3.1500E+02	4.8780E+03	1.5210E-02	1.4884E-02	1.3612E+05	1.3909E+05	4.0869E+04	4.1762E+04
36	3.2400E+02	5.1905E+03	1.5689E-02	1.5354E-02	1.4041E+05	1.4348E+05	4.2158E+04	4.3079E+04
37	3.3300E+02	5.4442E+03	1.6068E-02	1.5724E-02	1.4380E+05	1.4694E+05	4.3176E+04	4.4119E+04
38	3.4200E+02	5.6312E+03	1.6342E-02	1.5992E-02	1.4625E+05	1.4944E+05	4.3911E+04	4.4871E+04
39	3.5100E+02	5.7458E+03	1.6507E-02	1.6154E-02	1.4773E+05	1.5096E+05	4.4356E+04	4.5325E+04
40	3.6000E+02	5.7843E+03	1.6562E-02	1.6208E-02	1.4822E+05	1.5146E+05	4.4504E+04	4.5477E+04

ROLLER NO.	DEPTH TO MAXIMUM SHEAR OUTER (IN)	DEPTH TO MAXIMUM SHEAR INNER	MAX ORTHOGONAL SHEAR OUTER (PSI)	MAX ORTHOGONAL SHEAR INNER	DEPTH TO ORTH. SHEAR OUTER (IN)	DEPTH TO ORTH. SHEAR INNER
1	1.2976E-02	1.2699E-02	3.6932E+04	3.7739E+04	8.2535E-03	8.0770E-03
2	1.2846E-02	1.2571E-02	3.6562E+04	3.7361E+04	8.1708E-03	7.9961E-03
3	1.2631E-02	1.2361E-02	3.5950E+04	3.6735E+04	8.0340E-03	7.8622E-03
4	1.2333E-02	1.2070E-02	3.5102E+04	3.5869E+04	7.8446E-03	7.6768E-03
5	1.1956E-02	1.1701E-02	3.4029E+04	3.4773E+04	7.6048E-03	7.4421E-03
6	1.1504E-02	1.1258E-02	3.2743E+04	3.3458E+04	7.3173E-03	7.1608E-03

7	1.0983E-02	1.0748E-02	3.1259E+04	3.1942E+04	6.9856E-03	6.8362E-03
8	1.0398E-02	1.0176E-02	2.9594E+04	3.0241E+04	6.6137E-03	6.4723E-03
9	9.7577E-03	9.5490E-03	2.7772E+04	2.8379E+04	6.2064E-03	6.0736E-03
10	9.0701E-03	8.8761E-03	2.5815E+04	2.6379E+04	5.7690E-03	5.6457E-03
11	8.3453E-03	8.1668E-03	2.3752E+04	2.4271E+04	5.3080E-03	5.1945E-03
12	7.5947E-03	7.4323E-03	2.1616E+04	2.2088E+04	4.8306E-03	4.7273E-03
13	6.8318E-03	6.6857E-03	1.9444E+04	1.9869E+04	4.3454E-03	4.2525E-03
14	6.0726E-03	5.9428E-03	1.7284E+04	1.7661E+04	3.8625E-03	3.7799E-03
15	5.3368E-03	5.2226E-03	1.5189E+04	1.5521E+04	3.3945E-03	3.3219E-03
16	4.6490E-03	4.5496E-03	1.3232E+04	1.3521E+04	2.9570E-03	2.8938E-03
17	4.0412E-03	3.9547E-03	1.1502E+04	1.1753E+04	2.5704E-03	2.5154E-03
18	3.5535E-03	3.4775E-03	1.0114E+04	1.0335E+04	2.2602E-03	2.2119E-03
19	3.2326E-03	3.1634E-03	9.2004E+03	9.4014E+03	2.0561E-03	2.0121E-03
20	3.1198E-03	3.0531E-03	8.8794E+03	9.0734E+03	1.9843E-03	1.9419E-03
21	3.2326E-03	3.1634E-03	9.2004E+03	9.4014E+03	2.0561E-03	2.0121E-03
22	3.5535E-03	3.4775E-03	1.0114E+04	1.0335E+04	2.2602E-03	2.2119E-03
23	4.0412E-03	3.9547E-03	1.1502E+04	1.1753E+04	2.5704E-03	2.5154E-03
24	4.6490E-03	4.5496E-03	1.3232E+04	1.3521E+04	2.9570E-03	2.8938E-03
25	5.3368E-03	5.2226E-03	1.5189E+04	1.5521E+04	3.3945E-03	3.3219E-03
26	6.0726E-03	5.9428E-03	1.7284E+04	1.7661E+04	3.8625E-03	3.7799E-03
27	6.8318E-03	6.6857E-03	1.9444E+04	1.9869E+04	4.3454E-03	4.2525E-03
28	7.5947E-03	7.4323E-03	2.1616E+04	2.2088E+04	4.8306E-03	4.7273E-03
29	8.3453E-03	8.1668E-03	2.3752E+04	2.4271E+04	5.3080E-03	5.1945E-03
30	9.0701E-03	8.8761E-03	2.5815E+04	2.6379E+04	5.7690E-03	5.6457E-03
31	9.7577E-03	9.5490E-03	2.7772E+04	2.8379E+04	6.2064E-03	6.0736E-03
32	1.0398E-02	1.0176E-02	2.9594E+04	3.0241E+04	6.6137E-03	6.4723E-03
33	1.0983E-02	1.0748E-02	3.1259E+04	3.1942E+04	6.9856E-03	6.8362E-03
34	1.1504E-02	1.1258E-02	3.2743E+04	3.3458E+04	7.3173E-03	7.1608E-03
35	1.1956E-02	1.1701E-02	3.4029E+04	3.4773E+04	7.6048E-03	7.4421E-03
36	1.2333E-02	1.2070E-02	3.5102E+04	3.5869E+04	7.8446E-03	7.6768E-03
37	1.2631E-02	1.2361E-02	3.5950E+04	3.6735E+04	8.0340E-03	7.8622E-03
38	1.2846E-02	1.2571E-02	3.6562E+04	3.7361E+04	8.1708E-03	7.9961E-03
39	1.2976E-02	1.2699E-02	3.6932E+04	3.7739E+04	8.2535E-03	8.0770E-03
40	1.3020E-02	1.2741E-02	3.7056E+04	3.7866E+04	8.2812E-03	8.1041E-03

SUBSURFACE STRESS OUTPUT FOR MAX. LOADED ELEMENT INNER RACE CONTACT

1 SUBSURFACE STRESSES FOR BEARING NO. 1 ELEMENT NO. 40

DEPTH BELOW SURFACE	PERPENDICULAR TO ROLLING DIRECTION PRIN STRESS	ALONG ROLLING DIRECTION PRIN STRESS	VERTICAL INTO RACE PRIN STRESS	SUB-SURFACE SHEAR STRESS (45 DEG)	DISTORTION ENERGY HYPOTHESIS STRESS	OCTAHEDRAL SHEAR STRESS
Z (IN)	SX (PSI)	SY (PSI)	SZ (PSI)	SMAX (PSI)	DEH (PSI)	OCT (PSI)
.010	-.4226E+05	-.4014E+05	-.1289E+06	.4438E+05	.8772E+05	.4135E+05
.020	-.2683E+05	-.1197E+05	-.9536E+05	.4170E+05	.7704E+05	.3632E+05
.030	-.1915E+05	-.4603E+04	-.7200E+05	.3370E+05	.6143E+05	.2896E+05
.040	-.1476E+05	-.2161E+04	-.5688E+05	.2736E+05	.4964E+05	.2340E+05
.050	-.1197E+05	-.1166E+04	-.4671E+05	.2277E+05	.4121E+05	.1943E+05
.060	-.1005E+05	-.6955E+03	-.3950E+05	.1940E+05	.3508E+05	.1653E+05
.070	-.8653E+04	-.4461E+03	-.3417E+05	.1686E+05	.3046E+05	.1436E+05
.080	-.7595E+04	-.3025E+03	-.3008E+05	.1489E+05	.2688E+05	.1267E+05
.090	-.6765E+04	-.2142E+03	-.2685E+05	.1332E+05	.2403E+05	.1133E+05
.100	-.6098E+04	-.1571E+03	-.2423E+05	.1204E+05	.2172E+05	.1024E+05
.110	-.5549E+04	-.1186E+03	-.2208E+05	.1098E+05	.1981E+05	.9339E+04
.120	-.5091E+04	-.9163E+02	-.2027E+05	.1009E+05	.1820E+05	.8582E+04
.130	-.4703E+04	-.7226E+02	-.1874E+05	.9333E+04	.1684E+05	.7937E+04
.140	-.4369E+04	-.5798E+02	-.1742E+05	.8681E+04	.1566E+05	.7381E+04
.150	-.4080E+04	-.4722E+02	-.1627E+05	.8112E+04	.1463E+05	.6897E+04
.160	-.3826E+04	-.3896E+02	-.1527E+05	.7613E+04	.1373E+05	.6473E+04
.170	-.3602E+04	-.3252E+02	-.1438E+05	.7172E+04	.1293E+05	.6097E+04
.180	-.3403E+04	-.2742E+02	-.1358E+05	.6778E+04	.1222E+05	.5762E+04
.190	-.3224E+04	-.2334E+02	-.1287E+05	.6425E+04	.1159E+05	.5462E+04
.200	-.3064E+04	-.2002E+02	-.1223E+05	.6107E+04	.1101E+05	.5192E+04
.210	-.2918E+04	-.1731E+02	-.1166E+05	.5819E+04	.1049E+05	.4946E+04
.220	-.2786E+04	-.1506E+02	-.1113E+05	.5557E+04	.1002E+05	.4723E+04
.230	-.2665E+04	-.1319E+02	-.1065E+05	.5317E+04	.9587E+04	.4519E+04
.240	-.2554E+04	-.1161E+02	-.1021E+05	.5097E+04	.9190E+04	.4332E+04
.250	-.2452E+04	-.1028E+02	-.9799E+04	.4894E+04	.8825E+04	.4160E+04
.260	-.2358E+04	-.9138E+01	-.9424E+04	.4707E+04	.8488E+04	.4001E+04
.270	-.2271E+04	-.8162E+01	-.9076E+04	.4534E+04	.8175E+04	.3854E+04
.280	-.2190E+04	-.7320E+01	-.8753E+04	.4373E+04	.7884E+04	.3717E+04
.290	-.2115E+04	-.6590E+01	-.8452E+04	.4223E+04	.7614E+04	.3589E+04
.300	-.2044E+04	-.5954E+01	-.8171E+04	.4083E+04	.7361E+04	.3470E+04
.310	-.1978E+04	-.5397E+01	-.7908E+04	.3952E+04	.7124E+04	.3358E+04
.320	-.1917E+04	-.4908E+01	-.7662E+04	.3829E+04	.6903E+04	.3254E+04
.330	-.1859E+04	-.4476E+01	-.7430E+04	.3713E+04	.6694E+04	.3156E+04
.340	-.1804E+04	-.4093E+01	-.7212E+04	.3604E+04	.6498E+04	.3063E+04
.350	-.1753E+04	-.3752E+01	-.7007E+04	.3501E+04	.6313E+04	.2976E+04

ENGLISH UNITS

2 OUTPUT DATA FOR BEARING NO. 2 ROLLER BEARING
SKF ROLLER DEFLECTION ALGORITHM USED

OUTPUT EDIT FOR MAXIMUM LOADED ROLLING ELEMENT

ROLLER NO.	LOCATION ANGLE (DEG)	ROLL LOAD (LB)	CONTACT AREA SEMI-WIDTH OUTER (IN)	CONTACT AREA SEMI-WIDTH INNER (IN)	HERTZ CONTACT STRESS OUTER (MAX.)	HERTZ CONTACT STRESS INNER (MAX.)	MAXIMUM SHEAR STRESS OUTER (PSI)	MAXIMUM SHEAR STRESS INNER (PSI)
20	1.7550E+02	4.8897E+03	1.5228E-02	1.4902E-02	1.3628E+05	1.3926E+05	4.0918E+04	4.1813E+04

ROLLER NO.	DEPTH TO MAXIMUM SHEAR OUTER (IN)	DEPTH TO MAXIMUM SHEAR INNER (IN)	MAX ORTHOGONAL SHEAR OUTER (PSI)	MAX ORTHOGONAL SHEAR INNER (PSI)	DEPTH TO ORTH. SHEAR OUTER (IN)	DEPTH TO ORTH. SHEAR INNER (IN)
20	1.1971E-02	1.1715E-02	3.4070E+04	3.4815E+04	7.6139E-03	7.4511E-03

NUMBER OF UNLOADED ROLLERS = 26
NUMBER OF LOADED ROLLERS = 14

2 OUTPUT DATA FOR BEARING NO. 2 ROLLER BEARING **ENGLISH UNITS*

SKF ROLLER DEFLECTION ALGORITHM USED

ROLLER NO.	LOCATION ANGLE (DEG)	ROLL LOAD (LB)	CONTACT AREA SEMI-WIDTH OUTER (IN)	CONTACT AREA SEMI-WIDTH INNER	HERTZ CONTACT STRESS OUTER (MAX.)	HERTZ CONTACT STRESS INNER	MAXIMUM SHEAR STRESS OUTER (PSI)	MAXIMUM SHEAR STRESS INNER
1	4.5000E+00	0.0000E+00	0.0000E+00	0.0000E+00	0.0000E+00	0.0000E+00	0.0000E+00	0.0000E+00
2	1.3500E+01	0.0000E+00	0.0000E+00	0.0000E+00	0.0000E+00	0.0000E+00	0.0000E+00	0.0000E+00
3	2.2500E+01	0.0000E+00	0.0000E+00	0.0000E+00	0.0000E+00	0.0000E+00	0.0000E+00	0.0000E+00
4	3.1500E+01	0.0000E+00	0.0000E+00	0.0000E+00	0.0000E+00	0.0000E+00	0.0000E+00	0.0000E+00
5	4.0500E+01	0.0000E+00	0.0000E+00	0.0000E+00	0.0000E+00	0.0000E+00	0.0000E+00	0.0000E+00
6	4.9500E+01	0.0000E+00	0.0000E+00	0.0000E+00	0.0000E+00	0.0000E+00	0.0000E+00	0.0000E+00
7	5.8500E+01	0.0000E+00	0.0000E+00	0.0000E+00	0.0000E+00	0.0000E+00	0.0000E+00	0.0000E+00
8	6.7500E+01	0.0000E+00	0.0000E+00	0.0000E+00	0.0000E+00	0.0000E+00	0.0000E+00	0.0000E+00
9	7.6500E+01	0.0000E+00	0.0000E+00	0.0000E+00	0.0000E+00	0.0000E+00	0.0000E+00	0.0000E+00
10	8.5500E+01	0.0000E+00	0.0000E+00	0.0000E+00	0.0000E+00	0.0000E+00	0.0000E+00	0.0000E+00
11	9.4500E+01	0.0000E+00	0.0000E+00	0.0000E+00	0.0000E+00	0.0000E+00	0.0000E+00	0.0000E+00
12	1.0350E+02	0.0000E+00	0.0000E+00	0.0000E+00	0.0000E+00	0.0000E+00	0.0000E+00	0.0000E+00
13	1.1250E+02	0.0000E+00	0.0000E+00	0.0000E+00	0.0000E+00	0.0000E+00	0.0000E+00	0.0000E+00
14	1.2150E+02	8.2552E+02	6.2569E-03	6.1231E-03	5.5996E+04	5.7220E+04	1.6813E+04	1.7180E+04
15	1.3050E+02	1.7987E+03	9.2358E-03	9.0382E-03	8.2655E+04	8.4461E+04	2.4817E+04	2.5359E+04
16	1.3950E+02	2.7308E+03	1.1380E-02	1.1137E-02	1.0184E+05	1.0407E+05	3.0579E+04	3.1247E+04
17	1.4850E+02	3.5484E+03	1.2972E-02	1.2695E-02	1.1609E+05	1.1863E+05	3.4857E+04	3.5619E+04
18	1.5750E+02	4.2020E+03	1.4117E-02	1.3815E-02	1.2633E+05	1.2910E+05	3.7932E+04	3.8761E+04
19	1.6650E+02	4.6567E+03	1.4861E-02	1.4543E-02	1.3299E+05	1.3590E+05	3.9932E+04	4.0804E+04
20	1.7550E+02	4.8897E+03	1.5228E-02	1.4902E-02	1.3628E+05	1.3926E+05	4.0918E+04	4.1813E+04
21	1.8450E+02	4.8897E+03	1.5228E-02	1.4902E-02	1.3628E+05	1.3926E+05	4.0918E+04	4.1813E+04
22	1.9350E+02	4.6567E+03	1.4861E-02	1.4543E-02	1.3299E+05	1.3590E+05	3.9932E+04	4.0804E+04
23	2.0250E+02	4.2020E+03	1.4117E-02	1.3815E-02	1.2633E+05	1.2910E+05	3.7932E+04	3.8761E+04
24	2.1150E+02	3.5484E+03	1.2972E-02	1.2695E-02	1.1609E+05	1.1863E+05	3.4857E+04	3.5619E+04
25	2.2050E+02	2.7308E+03	1.1380E-02	1.1137E-02	1.0184E+05	1.0407E+05	3.0579E+04	3.1247E+04
26	2.2950E+02	1.7987E+03	9.2358E-03	9.0382E-03	8.2655E+04	8.4461E+04	2.4817E+04	2.5359E+04
27	2.3850E+02	8.2552E+02	6.2569E-03	6.1231E-03	5.5996E+04	5.7220E+04	1.6813E+04	1.7180E+04
28	2.4750E+02	0.0000E+00	0.0000E+00	0.0000E+00	0.0000E+00	0.0000E+00	0.0000E+00	0.0000E+00
29	2.5650E+02	0.0000E+00	0.0000E+00	0.0000E+00	0.0000E+00	0.0000E+00	0.0000E+00	0.0000E+00
30	2.6550E+02	0.0000E+00	0.0000E+00	0.0000E+00	0.0000E+00	0.0000E+00	0.0000E+00	0.0000E+00
31	2.7450E+02	0.0000E+00	0.0000E+00	0.0000E+00	0.0000E+00	0.0000E+00	0.0000E+00	0.0000E+00
32	2.8350E+02	0.0000E+00	0.0000E+00	0.0000E+00	0.0000E+00	0.0000E+00	0.0000E+00	0.0000E+00
33	2.9250E+02	0.0000E+00	0.0000E+00	0.0000E+00	0.0000E+00	0.0000E+00	0.0000E+00	0.0000E+00
34	3.0150E+02	0.0000E+00	0.0000E+00	0.0000E+00	0.0000E+00	0.0000E+00	0.0000E+00	0.0000E+00
35	3.1050E+02	0.0000E+00	0.0000E+00	0.0000E+00	0.0000E+00	0.0000E+00	0.0000E+00	0.0000E+00
36	3.1950E+02	0.0000E+00	0.0000E+00	0.0000E+00	0.0000E+00	0.0000E+00	0.0000E+00	0.0000E+00
37	3.2850E+02	0.0000E+00	0.0000E+00	0.0000E+00	0.0000E+00	0.0000E+00	0.0000E+00	0.0000E+00
38	3.3750E+02	0.0000E+00	0.0000E+00	0.0000E+00	0.0000E+00	0.0000E+00	0.0000E+00	0.0000E+00
39	3.4650E+02	0.0000E+00	0.0000E+00	0.0000E+00	0.0000E+00	0.0000E+00	0.0000E+00	0.0000E+00
40	3.5550E+02	0.0000E+00	0.0000E+00	0.0000E+00	0.0000E+00	0.0000E+00	0.0000E+00	0.0000E+00

ROLLER NO.	DEPTH TO MAXIMUM SHEAR OUTER (IN)	DEPTH TO MAXIMUM SHEAR INNER	MAX ORTHOGONAL SHEAR OUTER (PSI)	MAX ORTHOGONAL SHEAR INNER	DEPTH TO ORTH. SHEAR OUTER (IN)	DEPTH TO ORTH. SHEAR INNER
1	0.0000E+00	0.0000E+00	0.0000E+00	0.0000E+00	0.0000E+00	0.0000E+00
2	0.0000E+00	0.0000E+00	0.0000E+00	0.0000E+00	0.0000E+00	0.0000E+00
3	0.0000E+00	0.0000E+00	0.0000E+00	0.0000E+00	0.0000E+00	0.0000E+00
4	0.0000E+00	0.0000E+00	0.0000E+00	0.0000E+00	0.0000E+00	0.0000E+00
5	0.0000E+00	0.0000E+00	0.0000E+00	0.0000E+00	0.0000E+00	0.0000E+00
6	0.0000E+00	0.0000E+00	0.0000E+00	0.0000E+00	0.0000E+00	0.0000E+00

7	0.0000E+00	0.0000E+00	0.0000E+00	0.0000E+00	0.0000E+00	0.0000E+00
8	0.0000E+00	0.0000E+00	0.0000E+00	0.0000E+00	0.0000E+00	0.0000E+00
9	0.0000E+00	0.0000E+00	0.0000E+00	0.0000E+00	0.0000E+00	0.0000E+00
10	0.0000E+00	0.0000E+00	0.0000E+00	0.0000E+00	0.0000E+00	0.0000E+00
11	0.0000E+00	0.0000E+00	0.0000E+00	0.0000E+00	0.0000E+00	0.0000E+00
12	0.0000E+00	0.0000E+00	0.0000E+00	0.0000E+00	0.0000E+00	0.0000E+00
13	0.0000E+00	0.0000E+00	0.0000E+00	0.0000E+00	0.0000E+00	0.0000E+00
14	4.9186E-03	4.8134E-03	1.3999E+04	1.4305E+04	3.1285E-03	3.0616E-03
15	7.2602E-03	7.1050E-03	2.0664E+04	2.1115E+04	4.6179E-03	4.5191E-03
16	8.9458E-03	8.7545E-03	2.5461E+04	2.6018E+04	5.6900E-03	5.5683E-03
17	1.0197E-02	9.9794E-03	2.9024E+04	2.9658E+04	6.4861E-03	6.3474E-03
18	1.1097E-02	1.0860E-02	3.1584E+04	3.2274E+04	7.0583E-03	6.9073E-03
19	1.1682E-02	1.1432E-02	3.3249E+04	3.3975E+04	7.4303E-03	7.2714E-03
20	1.1971E-02	1.1715E-02	3.4070E+04	3.4815E+04	7.6139E-03	7.4511E-03
21	1.1971E-02	1.1715E-02	3.4070E+04	3.4815E+04	7.6139E-03	7.4511E-03
22	1.1682E-02	1.1432E-02	3.3249E+04	3.3975E+04	7.4303E-03	7.2714E-03
23	1.1097E-02	1.0860E-02	3.1584E+04	3.2274E+04	7.0583E-03	6.9073E-03
24	1.0197E-02	9.9794E-03	2.9024E+04	2.9658E+04	6.4861E-03	6.3474E-03
25	8.9458E-03	8.7545E-03	2.5461E+04	2.6018E+04	5.6900E-03	5.5683E-03
26	7.2602E-03	7.1050E-03	2.0664E+04	2.1115E+04	4.6179E-03	4.5191E-03
27	4.9186E-03	4.8134E-03	1.3999E+04	1.4305E+04	3.1285E-03	3.0616E-03
28	0.0000E+00	0.0000E+00	0.0000E+00	0.0000E+00	0.0000E+00	0.0000E+00
29	0.0000E+00	0.0000E+00	0.0000E+00	0.0000E+00	0.0000E+00	0.0000E+00
30	0.0000E+00	0.0000E+00	0.0000E+00	0.0000E+00	0.0000E+00	0.0000E+00
31	0.0000E+00	0.0000E+00	0.0000E+00	0.0000E+00	0.0000E+00	0.0000E+00
32	0.0000E+00	0.0000E+00	0.0000E+00	0.0000E+00	0.0000E+00	0.0000E+00
33	0.0000E+00	0.0000E+00	0.0000E+00	0.0000E+00	0.0000E+00	0.0000E+00
34	0.0000E+00	0.0000E+00	0.0000E+00	0.0000E+00	0.0000E+00	0.0000E+00
35	0.0000E+00	0.0000E+00	0.0000E+00	0.0000E+00	0.0000E+00	0.0000E+00
36	0.0000E+00	0.0000E+00	0.0000E+00	0.0000E+00	0.0000E+00	0.0000E+00
37	0.0000E+00	0.0000E+00	0.0000E+00	0.0000E+00	0.0000E+00	0.0000E+00
38	0.0000E+00	0.0000E+00	0.0000E+00	0.0000E+00	0.0000E+00	0.0000E+00
39	0.0000E+00	0.0000E+00	0.0000E+00	0.0000E+00	0.0000E+00	0.0000E+00
40	0.0000E+00	0.0000E+00	0.0000E+00	0.0000E+00	0.0000E+00	0.0000E+00

SUBSURFACE STRESS OUTPUT FOR MAX. LOADED ELEMENT INNER RACE CONTACT

2 SUBSURFACE STRESSES FOR BEARING NO. 2 ELEMENT NO. 20

DEPTH BELOW SURFACE	PERPENDICULAR TO ROLLING DIRECTION PRIN STRESS	ALONG ROLLING DIRECTION PRIN STRESS	VERTICAL INTO RACE PRIN STRESS	SUB-SURFACE SHEAR STRESS (45 DEG)	DISTORTION ENERGY HYPOTHESIS STRESS	OCTAHEDRAL SHEAR STRESS
Z (IN)	SX (PSI)	SY (PSI)	SZ (PSI)	SMAX (PSI)	DEH (PSI)	OCT (PSI)
.010	-.3713E+05	-.3288E+05	-.1156E+06	.4138E+05	.8072E+05	.3805E+05
.020	-.2309E+05	-.9149E+04	-.8321E+05	.3703E+05	.6816E+05	.3213E+05
.030	-.1634E+05	-.3412E+04	-.6195E+05	.2927E+05	.5327E+05	.2511E+05
.040	-.1255E+05	-.1579E+04	-.4862E+05	.2352E+05	.4263E+05	.2009E+05
.050	-.1016E+05	-.8462E+03	-.3978E+05	.1947E+05	.3521E+05	.1660E+05
.060	-.8518E+04	-.5023E+03	-.3357E+05	.1653E+05	.2988E+05	.1408E+05
.070	-.7330E+04	-.3213E+03	-.2900E+05	.1434E+05	.2589E+05	.1221E+05
.080	-.6430E+04	-.2175E+03	-.2550E+05	.1264E+05	.2282E+05	.1076E+05
.090	-.5726E+04	-.1538E+03	-.2275E+05	.1130E+05	.2039E+05	.9611E+04
.100	-.5160E+04	-.1127E+03	-.2053E+05	.1021E+05	.1842E+05	.8681E+04
.110	-.4695E+04	-.8500E+02	-.1870E+05	.9305E+04	.1679E+05	.7913E+04
.120	-.4307E+04	-.6566E+02	-.1716E+05	.8548E+04	.1542E+05	.7269E+04
.130	-.3978E+04	-.5176E+02	-.1586E+05	.7904E+04	.1426E+05	.6721E+04
.140	-.3695E+04	-.4152E+02	-.1474E+05	.7349E+04	.1325E+05	.6248E+04
.150	-.3450E+04	-.3380E+02	-.1377E+05	.6867E+04	.1238E+05	.5838E+04
.160	-.3236E+04	-.2789E+02	-.1291E+05	.6443E+04	.1162E+05	.5478E+04
.170	-.3046E+04	-.2327E+02	-.1216E+05	.6069E+04	.1094E+05	.5159E+04
.180	-.2877E+04	-.1962E+02	-.1149E+05	.5735E+04	.1034E+05	.4875E+04
.190	-.2726E+04	-.1670E+02	-.1089E+05	.5436E+04	.9803E+04	.4621E+04
.200	-.2590E+04	-.1432E+02	-.1035E+05	.5167E+04	.9316E+04	.4392E+04
.210	-.2467E+04	-.1238E+02	-.9857E+04	.4923E+04	.8876E+04	.4184E+04
.220	-.2356E+04	-.1077E+02	-.9411E+04	.4700E+04	.8475E+04	.3995E+04
.230	-.2253E+04	-.9430E+01	-.9004E+04	.4497E+04	.8109E+04	.3823E+04
.240	-.2160E+04	-.8303E+01	-.8630E+04	.4311E+04	.7773E+04	.3664E+04
.250	-.2073E+04	-.7348E+01	-.8286E+04	.4140E+04	.7464E+04	.3518E+04
.260	-.1994E+04	-.6534E+01	-.7969E+04	.3981E+04	.7178E+04	.3384E+04
.270	-.1920E+04	-.5836E+01	-.7675E+04	.3834E+04	.6913E+04	.3259E+04
.280	-.1852E+04	-.5234E+01	-.7401E+04	.3698E+04	.6667E+04	.3143E+04
.290	-.1788E+04	-.4712E+01	-.7147E+04	.3571E+04	.6438E+04	.3035E+04
.300	-.1728E+04	-.4257E+01	-.6909E+04	.3452E+04	.6224E+04	.2934E+04
.310	-.1673E+04	-.3859E+01	-.6687E+04	.3341E+04	.6024E+04	.2840E+04
.320	-.1620E+04	-.3509E+01	-.6478E+04	.3237E+04	.5837E+04	.2751E+04
.330	-.1571E+04	-.3200E+01	-.6282E+04	.3140E+04	.5660E+04	.2668E+04
.340	-.1525E+04	-.2926E+01	-.6098E+04	.3047E+04	.5494E+04	.2590E+04
.350	-.1482E+04	-.2682E+01	-.5924E+04	.2961E+04	.5338E+04	.2516E+04

APPENDIX A-2

GENROL Computer Printout Sheets

for

LIMIT LOAD CASE

**ENGLISH UNITS

JOHN H. RUMBARGER, P.E., INC.
(610) 489-6904
8 KENNEY LANE, COLLEGEVILLE, PA 19426

GENROL ROLLING ELEMENT BEARING ANALYSIS PROGRAM (5 DEGREES OF FREEDOM)
ALONG X, ALONG Y, ALONG Z, ABOUT X, ABOUT Y

NREL YAW BEARING EXAMPLE - LIMIT LOAD CASE - APPENDIX A-2

INPUT DATA FOR INDIVIDUAL BEARINGS

BEARING NO.	TYPE OF BEARING	NUMBER OF ELEMENTS	ELEMENT DIA. (IN)	PITCH DIA. (IN)	CONTACT ANGLE (DEG)	RACE CURVATURES OUTER (%)	RACE CURVATURES INNER	DIAMETRAL CLEAR. (IN)	BEARING LOC. (IN)
1	ROLLER	40	1.7500E+00	5.7250E+01	4.5000E+01	0.0000E+00	0.0000E+00	0.0000E+00	0.0000E+00
2	ROLLER	40	1.7500E+00	5.7250E+01	-4.5000E+01	0.0000E+00	0.0000E+00	0.0000E+00	0.0000E+00

BEARING NO.	ROLL LENGTH (EFF. IN)	MODULUS OF ELASTICITY RACE (PSI)	MODULUS OF ELASTICITY ELEMENT	POISSONS RATIO RACE	POISSONS RATIO ELEMENT	FATIGUE CONSTANT OUTER	FATIGUE CONSTANT INNER	VALUES OF LAMBDA OUTER	VALUES OF LAMBDA INNER
1	1.5000E+00	3.0000E+07	3.0000E+07	2.5000E-01	2.5000E-01	4.9500E+04	4.9500E+04	5.4000E-01	5.4000E-01
2	1.5000E+00	3.0000E+07	3.0000E+07	2.5000E-01	2.5000E-01	4.9500E+04	4.9500E+04	5.4000E-01	5.4000E-01

BEARING NO.	INITIAL DISPLACEMENTS AT BEARING CENTER ALONG X (IN)	ALONG Y (IN)	ALONG Z (IN)	ABOUT X (RAD)	ABOUT Y (RAD)	AXIAL PRELOAD (LB)	PRELOAD DEFLECTION (IN)	PRELOAD CONTACT ANG. (DEG)	PHASE ANGLE (%)
1	0.0000E+00	0.0000E+00	0.0000E+00	0.0000E+00	0.0000E+00	0.0000E+00	0.0000E+00	0.0000E+00	0.0000E+00
2	0.0000E+00	0.0000E+00	0.0000E+00	0.0000E+00	0.0000E+00	0.0000E+00	0.0000E+00	0.0000E+00	0.0000E+00

BEARING NO.	WEIBULL SLOPE	LOAD-LIFE EXPONENT	AXIAL FLOAT	RADIAL FLOAT	ETA (DEG)	CONE RIB DIA. (IN)	SHOULDER CLEARANCE EC1 (IN)	SHOULDER CLEARANCE EC2	DESIGN H/D OUTER
1	1.1250E+00	3.3300E+00	NO	NO	0.0000E+00	0.0000E+00	0.0000E+00	0.0000E+00	0.0000E+00
2	1.1250E+00	3.3300E+00	NO	NO	0.0000E+00	0.0000E+00	0.0000E+00	0.0000E+00	0.0000E+00

BEARING NO.	CAGE OPENING (IN)	AXIAL SPRING	ROLL CYLN. LENGTH (IN)	CROWN (IN or RAD)	BALL EXP.	LIFE ADJUSTMENT FACTORS RELIABILITY	MATERIAL	LUBRICATION	DESIGN H/D INNER
1	0.0000E+00	NO	0.0000E+00	0.0000E+00	.00	1.0000E+00	6.6000E-01	8.5000E-01	0.0000E+00
2	0.0000E+00	NO	0.0000E+00	0.0000E+00	.00	1.0000E+00	6.6000E-01	8.5000E-01	0.0000E+00

ROW 1 HAS 40 ELEMENTS AND WAS MODELED WITH 40 ELEMENTS

ROW 2 HAS 40 ELEMENTS AND WAS MODELED WITH 40 ELEMENTS

INPUT DATA FOR BEARING SYSTEM

EXTERNAL FORCES AND MOMENTS APPLIED TO SHAFT

RPM (RELATIVE)	OPM (OSC/MIN)	AMPL OSC (DEG)	ALONG X F1 (LB)	ALONG Y F2 (LB)	ALONG Z F3 (LB)	ABOUT X F4 (LB-IN)	ABOUT Y F5 (LB-IN)
2.8500E-01	1.6667E-02	0.0000E+00	3.3235E+04	0.0000E+00	-5.0800E+04	0.0000E+00	2.1500E+07

INNER RACES ROTATE WITH RESPECT TO LOAD
OUTER RACES STATIONARY WITH RESPECT TO LOAD
PROBLEM IS POSED IN FOLLOWING DEGREES OF FREEDOM
ALONGX,ALONGZ,ABOUTY,

ESTIMATE OF BEARING INNER RACE FRICTION TORQUE BASED ON
A COEFFICIENT OF TRACTION TIMES THE SUM OF THE BALL OR ROLLER LOADS

SYSTEM FRICTION TORQUE (IN-LBS) = 1.4859E+05
(FT-LBS) = 1.2382E+04
(HP) = 6.7214E-01

BRG NO.	SUM OF ELEM LOADS (LBS)	FRICTION TORQUE (IN-LBS)	FRICTION TORQUE (FT-LBS)	SHAFT (HP)	SHAFT (RPM)	TRACTION COEFFICIENT
1	6.9907E+05	7.8313E+04	6.5261E+03	3.5427E-01	2.8500E-01	4.0000E-03
2	6.2723E+05	7.0265E+04	5.8554E+03	3.1787E-01	2.8500E-01	4.0000E-03

OUTPUT DATA FOR BEARING SYSTEM NUMBER OF ITERATIONS = 3 **ENGLISH UNITS*

**** LIFE COMPUTED PER AFBMA STANDARDS ****

SYSTEM REACTIONS ON SHAFT AT ORIGIN

HOURS LIFE (B-10)	ALONG X (LB)	ALONG Y (LB)	ALONG Z (LB)	ABOUT X (LB-IN)	ABOUT Y (LB-IN)
5.4595E+02	-3.3235E+04	-1.1739E-02	5.0800E+04	-1.7511E-01	-2.1500E+07

DISPLACEMENTS OF REFERENCE LINE AT ORIGIN

ALONG X (IN)	ALONG Y (IN)	ALONG Z (IN)	ABOUT X (RAD)	ABOUT Y (RAD)
-1.6982E-04	0.0000E+00	-6.7816E-04	0.0000E+00	6.3705E-04

NON-LINEAR SPRING RATES OF SYSTEM AT ORIGIN

DFX/DX (LB/IN)	DFX/DY (LB/IN)	DFX/DZ (LB/IN)	DFX/DALX (LB/RAD)	DFX/DALY (LB/RAD)	DFY/DY (LB/IN)	DFY/DZ (LB/IN)	DFY/DALX (LB/RAD)
-4.9135E+07	0.0000E+00	6.1278E+07	0.0000E+00	-1.0120E+07	0.0000E+00	0.0000E+00	0.0000E+00

NON-LINEAR SPRING RATES (CONTINUED)

DFY/DALY (LB/RAD)	DFZ/DZ (LB/IN)	DFZ/DALX (LB/RAD)	DFZ/DALY (LB/RAD)	DMX/DALX (LB-IN/RAD)	DMX/DALY (LB-IN/RAD)	DMY/DALY (LB-IN/RAD)
0.0000E+00	-9.1622E+07	0.0000E+00	1.3957E+07	0.0000E+00	0.0000E+00	-4.0261E+10

REACTIONS OF BEARINGS ON SHAFT

BEARING NO.	ALONG X (LB)	ALONG Y (LB)	ALONG Z (LB)	ABOUT X (LB-IN)	ABOUT Y (LB-IN)
1	-3.9216E+05	-2.2927E-03	4.9432E+05	-2.0641E-01	-1.0983E+07
2	3.5893E+05	-9.4461E-03	-4.4352E+05	3.5731E-02	-1.0052E+07

RELATIVE SHAFT DISPLACEMENTS AT BEARING CENTER

BEARING NO.	ALONG X (IN)	ALONG Y (IN)	ALONG Z (IN)	ABOUT X (RAD)	ABOUT Y (RAD)
1	2.2433E-04	0.0000E+00	-6.7816E-04	0.0000E+00	6.3705E-04
2	-5.6397E-04	0.0000E+00	-6.7816E-04	0.0000E+00	6.3705E-04

BEARING NO.	HOURS LIFE (B-10)	CAPACITY (LB)		EQUIVALENT LOAD (LB)	ISO FACTOR ON CAPACITY
1	8.9848E+02	3.5414E+05	(THRUST)	1.0432E+06	9.8330E-01
2	1.1583E+03	3.5414E+05	(THRUST)	9.6662E+05	9.8330E-01

1 OUTPUT DATA FOR BEARING NO. 1 ROLLER BEARING **ENGLISH UNITS*

SKF ROLLER DEFLECTION ALGORITHM USED

OUTPUT EDIT FOR MAXIMUM LOADED ROLLING ELEMENT

ROLLER NO.	LOCATION ANGLE (DEG)	ROLL LOAD (LB)	CONTACT AREA SEMI-WIDTH OUTER (IN)	INNER	HERTZ CONTACT STRESS OUTER (MAX.)	INNER	MAXIMUM SHEAR STRESS OUTER (PSI)	INNER
40	3.6000E+02	5.6887E+04	5.1940E-02	5.0829E-02	4.6483E+05	4.7499E+05	1.3957E+05	1.4262E+05

ROLLER NO.	DEPTH TO MAXIMUM SHEAR OUTER (IN)	INNER	MAX ORTHOGONAL SHEAR OUTER (PSI)	INNER	DEPTH TO ORTH. SHEAR OUTER (IN)	INNER
40	4.0830E-02	3.9957E-02	1.1621E+05	1.1875E+05	2.5970E-02	2.5415E-02

NUMBER OF UNLOADED ROLLERS = 19

NUMBER OF LOADED ROLLERS = 21

1 OUTPUT DATA FOR BEARING NO. 1 ROLLER BEARING

SKF ROLLER DEFLECTION ALGORITHM USED

ROLLER NO.	LOCATION ANGLE (DEG)	ROLL LOAD (LB)	CONTACT AREA SEMI-WIDTH OUTER (IN)	CONTACT AREA SEMI-WIDTH INNER	HERTZ CONTACT STRESS OUTER (MAX.)	HERTZ CONTACT STRESS INNER	MAXIMUM SHEAR STRESS OUTER (PSI)	MAXIMUM SHEAR STRESS INNER
1	9.0000E+00	5.6082E+04	5.1571E-02	5.0469E-02	4.6153E+05	4.7162E+05	1.3858E+05	1.4160E+05
2	1.8000E+01	5.3699E+04	5.0464E-02	4.9385E-02	4.5162E+05	4.6149E+05	1.3560E+05	1.3856E+05
3	2.7000E+01	4.9830E+04	4.8612E-02	4.7572E-02	4.3505E+05	4.4456E+05	1.3062E+05	1.3348E+05
4	3.6000E+01	4.4626E+04	4.6003E-02	4.5020E-02	4.1170E+05	4.2070E+05	1.2361E+05	1.2632E+05
5	4.5000E+01	3.8292E+04	4.2614E-02	4.1703E-02	3.8137E+05	3.8970E+05	1.1451E+05	1.1701E+05
6	5.4000E+01	3.1089E+04	3.8397E-02	3.7576E-02	3.4363E+05	3.5114E+05	1.0318E+05	1.0543E+05
7	6.3000E+01	2.3326E+04	3.3260E-02	3.2548E-02	2.9765E+05	3.0416E+05	8.9371E+04	9.1324E+04
8	7.2000E+01	1.5372E+04	2.7000E-02	2.6422E-02	2.4163E+05	2.4691E+05	7.2550E+04	7.4135E+04
9	8.1000E+01	7.6909E+03	1.9098E-02	1.8689E-02	1.7091E+05	1.7465E+05	5.1317E+04	5.2439E+04
10	9.0000E+01	1.0835E+03	7.1683E-03	7.0150E-03	6.4152E+04	6.5554E+04	1.9262E+04	1.9683E+04
11	9.9000E+01	0.0000E+00	0.0000E+00	0.0000E+00	0.0000E+00	0.0000E+00	0.0000E+00	0.0000E+00
12	1.0800E+02	0.0000E+00	0.0000E+00	0.0000E+00	0.0000E+00	0.0000E+00	0.0000E+00	0.0000E+00
13	1.1700E+02	0.0000E+00	0.0000E+00	0.0000E+00	0.0000E+00	0.0000E+00	0.0000E+00	0.0000E+00
14	1.2600E+02	0.0000E+00	0.0000E+00	0.0000E+00	0.0000E+00	0.0000E+00	0.0000E+00	0.0000E+00
15	1.3500E+02	0.0000E+00	0.0000E+00	0.0000E+00	0.0000E+00	0.0000E+00	0.0000E+00	0.0000E+00
16	1.4400E+02	0.0000E+00	0.0000E+00	0.0000E+00	0.0000E+00	0.0000E+00	0.0000E+00	0.0000E+00
17	1.5300E+02	0.0000E+00	0.0000E+00	0.0000E+00	0.0000E+00	0.0000E+00	0.0000E+00	0.0000E+00
18	1.6200E+02	0.0000E+00	0.0000E+00	0.0000E+00	0.0000E+00	0.0000E+00	0.0000E+00	0.0000E+00
19	1.7100E+02	0.0000E+00	0.0000E+00	0.0000E+00	0.0000E+00	0.0000E+00	0.0000E+00	0.0000E+00
20	1.8000E+02	0.0000E+00	0.0000E+00	0.0000E+00	0.0000E+00	0.0000E+00	0.0000E+00	0.0000E+00
21	1.8900E+02	0.0000E+00	0.0000E+00	0.0000E+00	0.0000E+00	0.0000E+00	0.0000E+00	0.0000E+00
22	1.9800E+02	0.0000E+00	0.0000E+00	0.0000E+00	0.0000E+00	0.0000E+00	0.0000E+00	0.0000E+00
23	2.0700E+02	0.0000E+00	0.0000E+00	0.0000E+00	0.0000E+00	0.0000E+00	0.0000E+00	0.0000E+00
24	2.1600E+02	0.0000E+00	0.0000E+00	0.0000E+00	0.0000E+00	0.0000E+00	0.0000E+00	0.0000E+00
25	2.2500E+02	0.0000E+00	0.0000E+00	0.0000E+00	0.0000E+00	0.0000E+00	0.0000E+00	0.0000E+00
26	2.3400E+02	0.0000E+00	0.0000E+00	0.0000E+00	0.0000E+00	0.0000E+00	0.0000E+00	0.0000E+00
27	2.4300E+02	0.0000E+00	0.0000E+00	0.0000E+00	0.0000E+00	0.0000E+00	0.0000E+00	0.0000E+00
28	2.5200E+02	0.0000E+00	0.0000E+00	0.0000E+00	0.0000E+00	0.0000E+00	0.0000E+00	0.0000E+00
29	2.6100E+02	0.0000E+00	0.0000E+00	0.0000E+00	0.0000E+00	0.0000E+00	0.0000E+00	0.0000E+00
30	2.7000E+02	1.0835E+03	7.1683E-03	7.0150E-03	6.4152E+04	6.5554E+04	1.9262E+04	1.9683E+04
31	2.7900E+02	7.6909E+03	1.9098E-02	1.8689E-02	1.7091E+05	1.7465E+05	5.1317E+04	5.2439E+04
32	2.8800E+02	1.5372E+04	2.7000E-02	2.6422E-02	2.4163E+05	2.4691E+05	7.2550E+04	7.4135E+04
33	2.9700E+02	2.3326E+04	3.3260E-02	3.2548E-02	2.9765E+05	3.0416E+05	8.9371E+04	9.1324E+04
34	3.0600E+02	3.1089E+04	3.8397E-02	3.7576E-02	3.4363E+05	3.5114E+05	1.0318E+05	1.0543E+05
35	3.1500E+02	3.8292E+04	4.2614E-02	4.1703E-02	3.8137E+05	3.8970E+05	1.1451E+05	1.1701E+05
36	3.2400E+02	4.4626E+04	4.6003E-02	4.5020E-02	4.1170E+05	4.2070E+05	1.2361E+05	1.2632E+05
37	3.3300E+02	4.9830E+04	4.8612E-02	4.7572E-02	4.3505E+05	4.4456E+05	1.3062E+05	1.3348E+05
38	3.4200E+02	5.3699E+04	5.0464E-02	4.9385E-02	4.5162E+05	4.6149E+05	1.3560E+05	1.3856E+05
39	3.5100E+02	5.6082E+04	5.1571E-02	5.0469E-02	4.6153E+05	4.7162E+05	1.3858E+05	1.4160E+05
40	3.6000E+02	5.6887E+04	5.1940E-02	5.0829E-02	4.6483E+05	4.7499E+05	1.3957E+05	1.4262E+05

ROLLER NO.	DEPTH TO MAXIMUM SHEAR OUTER (IN)	DEPTH TO MAXIMUM SHEAR INNER	MAX ORTHOGONAL SHEAR OUTER (PSI)	MAX ORTHOGONAL SHEAR INNER	DEPTH TO ORTH. SHEAR OUTER (IN)	DEPTH TO ORTH. SHEAR INNER
1	4.0540E-02	3.9673E-02	1.1538E+05	1.1791E+05	2.5786E-02	2.5234E-02
2	3.9670E-02	3.8821E-02	1.1291E+05	1.1537E+05	2.5232E-02	2.4692E-02
3	3.8214E-02	3.7397E-02	1.0876E+05	1.1114E+05	2.4306E-02	2.3786E-02
4	3.6163E-02	3.5390E-02	1.0293E+05	1.0518E+05	2.3002E-02	2.2510E-02
5	3.3499E-02	3.2782E-02	9.5343E+04	9.7426E+04	2.1307E-02	2.0851E-02
6	3.0184E-02	2.9539E-02	8.5908E+04	8.7786E+04	1.9199E-02	1.8788E-02

7	2.6145E-02	2.5586E-02	7.4413E+04	7.6040E+04	1.6630E-02	1.6274E-02
8	2.1224E-02	2.0771E-02	6.0408E+04	6.1728E+04	1.3500E-02	1.3211E-02
9	1.5013E-02	1.4692E-02	4.2729E+04	4.3662E+04	9.5489E-03	9.3447E-03
10	5.6350E-03	5.5145E-03	1.6038E+04	1.6388E+04	3.5841E-03	3.5075E-03
11	0.0000E+00	0.0000E+00	0.0000E+00	0.0000E+00	0.0000E+00	0.0000E+00
12	0.0000E+00	0.0000E+00	0.0000E+00	0.0000E+00	0.0000E+00	0.0000E+00
13	0.0000E+00	0.0000E+00	0.0000E+00	0.0000E+00	0.0000E+00	0.0000E+00
14	0.0000E+00	0.0000E+00	0.0000E+00	0.0000E+00	0.0000E+00	0.0000E+00
15	0.0000E+00	0.0000E+00	0.0000E+00	0.0000E+00	0.0000E+00	0.0000E+00
16	0.0000E+00	0.0000E+00	0.0000E+00	0.0000E+00	0.0000E+00	0.0000E+00
17	0.0000E+00	0.0000E+00	0.0000E+00	0.0000E+00	0.0000E+00	0.0000E+00
18	0.0000E+00	0.0000E+00	0.0000E+00	0.0000E+00	0.0000E+00	0.0000E+00
19	0.0000E+00	0.0000E+00	0.0000E+00	0.0000E+00	0.0000E+00	0.0000E+00
20	0.0000E+00	0.0000E+00	0.0000E+00	0.0000E+00	0.0000E+00	0.0000E+00
21	0.0000E+00	0.0000E+00	0.0000E+00	0.0000E+00	0.0000E+00	0.0000E+00
22	0.0000E+00	0.0000E+00	0.0000E+00	0.0000E+00	0.0000E+00	0.0000E+00
23	0.0000E+00	0.0000E+00	0.0000E+00	0.0000E+00	0.0000E+00	0.0000E+00
24	0.0000E+00	0.0000E+00	0.0000E+00	0.0000E+00	0.0000E+00	0.0000E+00
25	0.0000E+00	0.0000E+00	0.0000E+00	0.0000E+00	0.0000E+00	0.0000E+00
26	0.0000E+00	0.0000E+00	0.0000E+00	0.0000E+00	0.0000E+00	0.0000E+00
27	0.0000E+00	0.0000E+00	0.0000E+00	0.0000E+00	0.0000E+00	0.0000E+00
28	0.0000E+00	0.0000E+00	0.0000E+00	0.0000E+00	0.0000E+00	0.0000E+00
29	0.0000E+00	0.0000E+00	0.0000E+00	0.0000E+00	0.0000E+00	0.0000E+00
30	5.6350E-03	5.5145E-03	1.6038E+04	1.6388E+04	3.5841E-03	3.5075E-03
31	1.5013E-02	1.4692E-02	4.2729E+04	4.3662E+04	9.5489E-03	9.3447E-03
32	2.1224E-02	2.0771E-02	6.0408E+04	6.1728E+04	1.3500E-02	1.3211E-02
33	2.6145E-02	2.5586E-02	7.4413E+04	7.6040E+04	1.6630E-02	1.6274E-02
34	3.0184E-02	2.9539E-02	8.5908E+04	8.7786E+04	1.9199E-02	1.8788E-02
35	3.3499E-02	3.2782E-02	9.5343E+04	9.7426E+04	2.1307E-02	2.0851E-02
36	3.6163E-02	3.5390E-02	1.0293E+05	1.0518E+05	2.3002E-02	2.2510E-02
37	3.8214E-02	3.7397E-02	1.0876E+05	1.1114E+05	2.4306E-02	2.3786E-02
38	3.9670E-02	3.8821E-02	1.1291E+05	1.1537E+05	2.5232E-02	2.4692E-02
39	4.0540E-02	3.9673E-02	1.1538E+05	1.1791E+05	2.5786E-02	2.5234E-02
40	4.0830E-02	3.9957E-02	1.1621E+05	1.1875E+05	2.5970E-02	2.5415E-02

SUBSURFACE STRESS OUTPUT FOR MAX. LOADED ELEMENT INNER RACE CONTACT

1 SUBSURFACE STRESSES FOR BEARING NO. 1 ELEMENT NO. 40

DEPTH BELOW SURFACE	PERPENDICULAR TO ROLLING DIRECTION PRIN STRESS	ALONG ROLLING DIRECTION PRIN STRESS	VERTICAL INTO RACE PRIN STRESS	SUB-SURFACE SHEAR STRESS (45 DEG)	DISTORTION ENERGY HYPOTHESIS STRESS	OCTAHEDRAL SHEAR STRESS
Z (IN)	SX (PSI)	SY (PSI)	SZ (PSI)	SMAX (PSI)	DEH (PSI)	OCT (PSI)
.010	-.1953E+06	-.3152E+06	-.4661E+06	.1354E+06	.2350E+06	.1108E+06
.020	-.1618E+06	-.2051E+06	-.4420E+06	.1401E+06	.2613E+06	.1232E+06
.030	-.1356E+06	-.1334E+06	-.4091E+06	.1379E+06	.2746E+06	.1294E+06
.040	-.1153E+06	-.8801E+05	-.3733E+06	.1426E+06	.2726E+06	.1285E+06
.050	-.9952E+05	-.5946E+05	-.3386E+06	.1396E+06	.2614E+06	.1232E+06
.060	-.8708E+05	-.4127E+05	-.3070E+06	.1329E+06	.2461E+06	.1160E+06
.070	-.7713E+05	-.2944E+05	-.2791E+06	.1248E+06	.2296E+06	.1082E+06
.080	-.6907E+05	-.2154E+05	-.2547E+06	.1166E+06	.2134E+06	.1006E+06
.090	-.6243E+05	-.1614E+05	-.2336E+06	.1087E+06	.1984E+06	.9352E+05
.100	-.5689E+05	-.1235E+05	-.2152E+06	.1014E+06	.1847E+06	.8706E+05
.110	-.5222E+05	-.9632E+04	-.1992E+06	.9481E+05	.1723E+06	.8123E+05
.120	-.4823E+05	-.7639E+04	-.1853E+06	.8881E+05	.1612E+06	.7599E+05
.130	-.4478E+05	-.6149E+04	-.1730E+06	.8341E+05	.1512E+06	.7130E+05
.140	-.4178E+05	-.5016E+04	-.1621E+06	.7854E+05	.1423E+06	.6709E+05
.150	-.3915E+05	-.4142E+04	-.1524E+06	.7415E+05	.1343E+06	.6329E+05
.160	-.3682E+05	-.3456E+04	-.1438E+06	.7018E+05	.1270E+06	.5987E+05
.170	-.3475E+05	-.2912E+04	-.1361E+06	.6658E+05	.1204E+06	.5677E+05
.180	-.3289E+05	-.2476E+04	-.1291E+06	.6330E+05	.1145E+06	.5396E+05
.190	-.3122E+05	-.2121E+04	-.1228E+06	.6032E+05	.1090E+06	.5140E+05
.200	-.2971E+05	-.1831E+04	-.1170E+06	.5758E+05	.1041E+06	.4906E+05
.210	-.2833E+05	-.1590E+04	-.1117E+06	.5508E+05	.9951E+05	.4691E+05
.220	-.2708E+05	-.1390E+04	-.1069E+06	.5277E+05	.9532E+05	.4494E+05
.230	-.2593E+05	-.1222E+04	-.1025E+06	.5064E+05	.9146E+05	.4312E+05
.240	-.2487E+05	-.1080E+04	-.9841E+05	.4867E+05	.8789E+05	.4143E+05
.250	-.2390E+05	-.9583E+03	-.9464E+05	.4684E+05	.8458E+05	.3987E+05
.260	-.2300E+05	-.8545E+03	-.9113E+05	.4514E+05	.8150E+05	.3842E+05
.270	-.2216E+05	-.7651E+03	-.8788E+05	.4356E+05	.7863E+05	.3707E+05
.280	-.2138E+05	-.6877E+03	-.8484E+05	.4208E+05	.7595E+05	.3580E+05
.290	-.2066E+05	-.6203E+03	-.8200E+05	.4069E+05	.7344E+05	.3462E+05
.300	-.1998E+05	-.5614E+03	-.7935E+05	.3939E+05	.7110E+05	.3351E+05
.310	-.1934E+05	-.5097E+03	-.7686E+05	.3817E+05	.6889E+05	.3247E+05
.320	-.1874E+05	-.4642E+03	-.7451E+05	.3703E+05	.6681E+05	.3150E+05
.330	-.1818E+05	-.4239E+03	-.7231E+05	.3594E+05	.6486E+05	.3057E+05
.340	-.1765E+05	-.3881E+03	-.7023E+05	.3492E+05	.6301E+05	.2970E+05
.350	-.1716E+05	-.3562E+03	-.6827E+05	.3395E+05	.6126E+05	.2888E+05

ENGLISH UNITS

2 OUTPUT DATA FOR BEARING NO. 2 ROLLER BEARING

SKF ROLLER DEFLECTION ALGORITHM USED

OUTPUT EDIT FOR MAXIMUM LOADED ROLLING ELEMENT

ROLLER NO.	LOCATION ANGLE (DEG)	ROLL LOAD (LB)	CONTACT AREA SEMI-WIDTH OUTER (IN)	CONTACT AREA SEMI-WIDTH INNER	HERTZ CONTACT STRESS OUTER (MAX.)	HERTZ CONTACT STRESS INNER	MAXIMUM SHEAR STRESS OUTER (PSI)	MAXIMUM SHEAR STRESS INNER
20	1.7550E+02	5.3021E+04	5.0144E-02	4.9072E-02	4.4876E+05	4.5857E+05	1.3474E+05	1.3769E+05

ROLLER NO.	DEPTH TO MAXIMUM SHEAR OUTER (IN)	DEPTH TO MAXIMUM SHEAR INNER	MAX ORTHOGONAL SHEAR OUTER (PSI)	MAX ORTHOGONAL SHEAR INNER	DEPTH TO ORTH. SHEAR OUTER (IN)	DEPTH TO ORTH. SHEAR INNER
20	3.9418E-02	3.8575E-02	1.1219E+05	1.1464E+05	2.5072E-02	2.4536E-02

NUMBER OF UNLOADED ROLLERS = 20

NUMBER OF LOADED ROLLERS = 20

2 OUTPUT DATA FOR BEARING NO. 2 ROLLER BEARING **ENGLISH UNITS

SKF ROLLER DEFLECTION ALGORITHM USED

ROLLER NO.	LOCATION ANGLE (DEG)	ROLL LOAD (LB)	CONTACT AREA SEMI-WIDTH OUTER (IN)	CONTACT AREA SEMI-WIDTH INNER	HERTZ CONTACT STRESS OUTER (MAX.)	HERTZ CONTACT STRESS INNER	MAXIMUM SHEAR STRESS OUTER (PSI)	MAXIMUM SHEAR STRESS INNER
1	4.5000E+00	0.0000E+00	0.0000E+00	0.0000E+00	0.0000E+00	0.0000E+00	0.0000E+00	0.0000E+00
2	1.3500E+01	0.0000E+00	0.0000E+00	0.0000E+00	0.0000E+00	0.0000E+00	0.0000E+00	0.0000E+00
3	2.2500E+01	0.0000E+00	0.0000E+00	0.0000E+00	0.0000E+00	0.0000E+00	0.0000E+00	0.0000E+00
4	3.1500E+01	0.0000E+00	0.0000E+00	0.0000E+00	0.0000E+00	0.0000E+00	0.0000E+00	0.0000E+00
5	4.0500E+01	0.0000E+00	0.0000E+00	0.0000E+00	0.0000E+00	0.0000E+00	0.0000E+00	0.0000E+00
6	4.9500E+01	0.0000E+00	0.0000E+00	0.0000E+00	0.0000E+00	0.0000E+00	0.0000E+00	0.0000E+00
7	5.8500E+01	0.0000E+00	0.0000E+00	0.0000E+00	0.0000E+00	0.0000E+00	0.0000E+00	0.0000E+00
8	6.7500E+01	0.0000E+00	0.0000E+00	0.0000E+00	0.0000E+00	0.0000E+00	0.0000E+00	0.0000E+00
9	7.6500E+01	0.0000E+00	0.0000E+00	0.0000E+00	0.0000E+00	0.0000E+00	0.0000E+00	0.0000E+00
10	8.5500E+01	0.0000E+00	0.0000E+00	0.0000E+00	0.0000E+00	0.0000E+00	0.0000E+00	0.0000E+00
11	9.4500E+01	1.2528E+03	7.7081E-03	7.5432E-03	6.8983E+04	7.0490E+04	2.0712E+04	2.1165E+04
12	1.0350E+02	7.9909E+03	1.9467E-02	1.9051E-02	1.7422E+05	1.7802E+05	5.2309E+04	5.3452E+04
13	1.1250E+02	1.5678E+04	2.7268E-02	2.6685E-02	2.4403E+05	2.4936E+05	7.3270E+04	7.4871E+04
14	1.2150E+02	2.3510E+04	3.3391E-02	3.2677E-02	2.9883E+05	3.0536E+05	8.9723E+04	9.1684E+04
15	1.3050E+02	3.1017E+04	3.8353E-02	3.7533E-02	3.4324E+05	3.5074E+05	1.0306E+05	1.0531E+05
16	1.3950E+02	3.7834E+04	4.2358E-02	4.1452E-02	3.7908E+05	3.8736E+05	1.1382E+05	1.1631E+05
17	1.4850E+02	4.3657E+04	4.5501E-02	4.4528E-02	4.0721E+05	4.1611E+05	1.2227E+05	1.2494E+05
18	1.5750E+02	4.8244E+04	4.7832E-02	4.6809E-02	4.2807E+05	4.3742E+05	1.2853E+05	1.3134E+05
19	1.6650E+02	5.1407E+04	4.9375E-02	4.8319E-02	4.4188E+05	4.5154E+05	1.3267E+05	1.3557E+05
20	1.7550E+02	5.3021E+04	5.0144E-02	4.9072E-02	4.4876E+05	4.5857E+05	1.3474E+05	1.3769E+05
21	1.8450E+02	5.3021E+04	5.0144E-02	4.9072E-02	4.4876E+05	4.5857E+05	1.3474E+05	1.3769E+05
22	1.9350E+02	5.1407E+04	4.9375E-02	4.8319E-02	4.4188E+05	4.5154E+05	1.3267E+05	1.3557E+05
23	2.0250E+02	4.8244E+04	4.7832E-02	4.6809E-02	4.2807E+05	4.3742E+05	1.2853E+05	1.3134E+05
24	2.1150E+02	4.3657E+04	4.5501E-02	4.4528E-02	4.0721E+05	4.1611E+05	1.2227E+05	1.2494E+05
25	2.2050E+02	3.7834E+04	4.2358E-02	4.1452E-02	3.7908E+05	3.8736E+05	1.1382E+05	1.1631E+05
26	2.2950E+02	3.1017E+04	3.8353E-02	3.7533E-02	3.4324E+05	3.5074E+05	1.0306E+05	1.0531E+05
27	2.3850E+02	2.3510E+04	3.3391E-02	3.2677E-02	2.9883E+05	3.0536E+05	8.9723E+04	9.1684E+04
28	2.4750E+02	1.5678E+04	2.7268E-02	2.6685E-02	2.4403E+05	2.4936E+05	7.3270E+04	7.4871E+04
29	2.5650E+02	7.9909E+03	1.9467E-02	1.9051E-02	1.7422E+05	1.7802E+05	5.2309E+04	5.3452E+04
30	2.6550E+02	1.2528E+03	7.7081E-03	7.5432E-03	6.8983E+04	7.0490E+04	2.0712E+04	2.1165E+04
31	2.7450E+02	0.0000E+00	0.0000E+00	0.0000E+00	0.0000E+00	0.0000E+00	0.0000E+00	0.0000E+00
32	2.8350E+02	0.0000E+00	0.0000E+00	0.0000E+00	0.0000E+00	0.0000E+00	0.0000E+00	0.0000E+00
33	2.9250E+02	0.0000E+00	0.0000E+00	0.0000E+00	0.0000E+00	0.0000E+00	0.0000E+00	0.0000E+00
34	3.0150E+02	0.0000E+00	0.0000E+00	0.0000E+00	0.0000E+00	0.0000E+00	0.0000E+00	0.0000E+00
35	3.1050E+02	0.0000E+00	0.0000E+00	0.0000E+00	0.0000E+00	0.0000E+00	0.0000E+00	0.0000E+00
36	3.1950E+02	0.0000E+00	0.0000E+00	0.0000E+00	0.0000E+00	0.0000E+00	0.0000E+00	0.0000E+00
37	3.2850E+02	0.0000E+00	0.0000E+00	0.0000E+00	0.0000E+00	0.0000E+00	0.0000E+00	0.0000E+00
38	3.3750E+02	0.0000E+00	0.0000E+00	0.0000E+00	0.0000E+00	0.0000E+00	0.0000E+00	0.0000E+00
39	3.4650E+02	0.0000E+00	0.0000E+00	0.0000E+00	0.0000E+00	0.0000E+00	0.0000E+00	0.0000E+00
40	3.5550E+02	0.0000E+00	0.0000E+00	0.0000E+00	0.0000E+00	0.0000E+00	0.0000E+00	0.0000E+00

ROLLER NO.	DEPTH TO MAXIMUM SHEAR OUTER (IN)	DEPTH TO MAXIMUM SHEAR INNER	MAX ORTHOGONAL SHEAR OUTER (PSI)	MAX ORTHOGONAL SHEAR INNER	DEPTH TO ORTH. SHEAR OUTER (IN)	DEPTH TO ORTH. SHEAR INNER
1	0.0000E+00	0.0000E+00	0.0000E+00	0.0000E+00	0.0000E+00	0.0000E+00
2	0.0000E+00	0.0000E+00	0.0000E+00	0.0000E+00	0.0000E+00	0.0000E+00
3	0.0000E+00	0.0000E+00	0.0000E+00	0.0000E+00	0.0000E+00	0.0000E+00
4	0.0000E+00	0.0000E+00	0.0000E+00	0.0000E+00	0.0000E+00	0.0000E+00
5	0.0000E+00	0.0000E+00	0.0000E+00	0.0000E+00	0.0000E+00	0.0000E+00
6	0.0000E+00	0.0000E+00	0.0000E+00	0.0000E+00	0.0000E+00	0.0000E+00

7	0.0000E+00	0.0000E+00	0.0000E+00	0.0000E+00	0.0000E+00	0.0000E+00
8	0.0000E+00	0.0000E+00	0.0000E+00	0.0000E+00	0.0000E+00	0.0000E+00
9	0.0000E+00	0.0000E+00	0.0000E+00	0.0000E+00	0.0000E+00	0.0000E+00
10	0.0000E+00	0.0000E+00	0.0000E+00	0.0000E+00	0.0000E+00	0.0000E+00
11	6.0593E-03	5.9297E-03	1.7246E+04	1.7623E+04	3.8540E-03	3.7716E-03
12	1.5303E-02	1.4976E-02	4.3554E+04	4.4506E+04	9.7334E-03	9.5253E-03
13	2.1435E-02	2.0977E-02	6.1007E+04	6.2341E+04	1.3634E-02	1.3342E-02
14	2.6248E-02	2.5687E-02	7.4707E+04	7.6340E+04	1.6695E-02	1.6338E-02
15	3.0149E-02	2.9505E-02	8.5809E+04	8.7685E+04	1.9177E-02	1.8766E-02
16	3.3298E-02	3.2586E-02	9.4770E+04	9.6841E+04	2.1179E-02	2.0726E-02
17	3.5769E-02	3.5004E-02	1.0180E+05	1.0403E+05	2.2751E-02	2.2264E-02
18	3.7601E-02	3.6797E-02	1.0702E+05	1.0936E+05	2.3916E-02	2.3405E-02
19	3.8814E-02	3.7984E-02	1.1047E+05	1.1288E+05	2.4688E-02	2.4160E-02
20	3.9418E-02	3.8575E-02	1.1219E+05	1.1464E+05	2.5072E-02	2.4536E-02
21	3.9418E-02	3.8575E-02	1.1219E+05	1.1464E+05	2.5072E-02	2.4536E-02
22	3.8814E-02	3.7984E-02	1.1047E+05	1.1288E+05	2.4688E-02	2.4160E-02
23	3.7601E-02	3.6797E-02	1.0702E+05	1.0936E+05	2.3916E-02	2.3405E-02
24	3.5769E-02	3.5004E-02	1.0180E+05	1.0403E+05	2.2751E-02	2.2264E-02
25	3.3298E-02	3.2586E-02	9.4770E+04	9.6841E+04	2.1179E-02	2.0726E-02
26	3.0149E-02	2.9505E-02	8.5809E+04	8.7685E+04	1.9177E-02	1.8766E-02
27	2.6248E-02	2.5687E-02	7.4707E+04	7.6340E+04	1.6695E-02	1.6338E-02
28	2.1435E-02	2.0977E-02	6.1007E+04	6.2341E+04	1.3634E-02	1.3342E-02
29	1.5303E-02	1.4976E-02	4.3554E+04	4.4506E+04	9.7334E-03	9.5253E-03
30	6.0593E-03	5.9297E-03	1.7246E+04	1.7623E+04	3.8540E-03	3.7716E-03
31	0.0000E+00	0.0000E+00	0.0000E+00	0.0000E+00	0.0000E+00	0.0000E+00
32	0.0000E+00	0.0000E+00	0.0000E+00	0.0000E+00	0.0000E+00	0.0000E+00
33	0.0000E+00	0.0000E+00	0.0000E+00	0.0000E+00	0.0000E+00	0.0000E+00
34	0.0000E+00	0.0000E+00	0.0000E+00	0.0000E+00	0.0000E+00	0.0000E+00
35	0.0000E+00	0.0000E+00	0.0000E+00	0.0000E+00	0.0000E+00	0.0000E+00
36	0.0000E+00	0.0000E+00	0.0000E+00	0.0000E+00	0.0000E+00	0.0000E+00
37	0.0000E+00	0.0000E+00	0.0000E+00	0.0000E+00	0.0000E+00	0.0000E+00
38	0.0000E+00	0.0000E+00	0.0000E+00	0.0000E+00	0.0000E+00	0.0000E+00
39	0.0000E+00	0.0000E+00	0.0000E+00	0.0000E+00	0.0000E+00	0.0000E+00
40	0.0000E+00	0.0000E+00	0.0000E+00	0.0000E+00	0.0000E+00	0.0000E+00

SUBSURFACE STRESS OUTPUT FOR MAX. LOADED ELEMENT INNER RACE CONTACT

2 SUBSURFACE STRESSES FOR BEARING NO. 2 ELEMENT NO. 20

DEPTH BELOW SURFACE	PERPENDICULAR TO ROLLING DIRECTION PRIN STRESS	ALONG ROLLING DIRECTION PRIN STRESS	VERTICAL INTO RACE PRIN STRESS	SUB-SURFACE SHEAR STRESS (45 DEG)	DISTORTION ENERGY HYPOTHESIS STRESS	OCTAHEDRAL SHEAR STRESS
Z (IN)	SX (PSI)	SY (PSI)	SZ (PSI)	SMAX (PSI)	DEH (PSI)	OCT (PSI)
.010	-.1873E+06	-.2998E+06	-.4493E+06	.1310E+06	.2277E+06	.1073E+06
.020	-.1541E+06	-.1919E+06	-.4247E+06	.1353E+06	.2537E+06	.1196E+06
.030	-.1286E+06	-.1230E+06	-.3912E+06	.1341E+06	.2655E+06	.1252E+06
.040	-.1089E+06	-.8020E+05	-.3554E+06	.1376E+06	.2621E+06	.1235E+06
.050	-.9372E+05	-.5366E+05	-.3212E+06	.1338E+06	.2499E+06	.1178E+06
.060	-.8182E+05	-.3697E+05	-.2903E+06	.1267E+06	.2342E+06	.1104E+06
.070	-.7236E+05	-.2622E+05	-.2632E+06	.1185E+06	.2176E+06	.1026E+06
.080	-.6472E+05	-.1910E+05	-.2398E+06	.1103E+06	.2018E+06	.9511E+05
.090	-.5845E+05	-.1426E+05	-.2195E+06	.1026E+06	.1871E+06	.8821E+05
.100	-.5323E+05	-.1089E+05	-.2020E+06	.9556E+05	.1739E+06	.8196E+05
.110	-.4882E+05	-.8471E+04	-.1868E+06	.8918E+05	.1620E+06	.7636E+05
.120	-.4507E+05	-.6707E+04	-.1736E+06	.8343E+05	.1514E+06	.7136E+05
.130	-.4183E+05	-.5391E+04	-.1619E+06	.7828E+05	.1419E+06	.6689E+05
.140	-.3902E+05	-.4393E+04	-.1517E+06	.7365E+05	.1334E+06	.6288E+05
.150	-.3655E+05	-.3624E+04	-.1426E+06	.6948E+05	.1258E+06	.5929E+05
.160	-.3437E+05	-.3021E+04	-.1345E+06	.6572E+05	.1189E+06	.5605E+05
.170	-.3243E+05	-.2544E+04	-.1272E+06	.6232E+05	.1127E+06	.5313E+05
.180	-.3069E+05	-.2161E+04	-.1206E+06	.5923E+05	.1071E+06	.5048E+05
.190	-.2913E+05	-.1851E+04	-.1147E+06	.5641E+05	.1020E+06	.4806E+05
.200	-.2772E+05	-.1597E+04	-.1093E+06	.5384E+05	.9728E+05	.4586E+05
.210	-.2643E+05	-.1387E+04	-.1043E+06	.5148E+05	.9300E+05	.4384E+05
.220	-.2526E+05	-.1212E+04	-.9983E+05	.4931E+05	.8907E+05	.4199E+05
.230	-.2419E+05	-.1065E+04	-.9568E+05	.4731E+05	.8544E+05	.4028E+05
.240	-.2320E+05	-.9405E+03	-.9186E+05	.4546E+05	.8209E+05	.3870E+05
.250	-.2229E+05	-.8348E+03	-.8833E+05	.4375E+05	.7898E+05	.3723E+05
.260	-.2145E+05	-.7442E+03	-.8505E+05	.4215E+05	.7609E+05	.3587E+05
.270	-.2067E+05	-.6662E+03	-.8200E+05	.4067E+05	.7341E+05	.3460E+05
.280	-.1994E+05	-.5987E+03	-.7916E+05	.3928E+05	.7090E+05	.3342E+05
.290	-.1926E+05	-.5400E+03	-.7651E+05	.3798E+05	.6855E+05	.3232E+05
.300	-.1863E+05	-.4886E+03	-.7403E+05	.3677E+05	.6635E+05	.3128E+05
.310	-.1804E+05	-.4436E+03	-.7170E+05	.3563E+05	.6429E+05	.3031E+05
.320	-.1748E+05	-.4039E+03	-.6951E+05	.3455E+05	.6235E+05	.2939E+05
.330	-.1695E+05	-.3688E+03	-.6745E+05	.3354E+05	.6052E+05	.2853E+05
.340	-.1646E+05	-.3376E+03	-.6551E+05	.3258E+05	.5879E+05	.2771E+05
.350	-.1600E+05	-.3099E+03	-.6367E+05	.3168E+05	.5716E+05	.2694E+05

APPENDIX B

PITCH BEARING EVALUATION

EXAMPLE

IN ACCORDANCE WITH NREL DG03

CONTENTS

Section		Page
1.0	Introduction	1
2.0	Pitch Bearing Example	1
	2.1 Pitch Bearing Type and Dimensions	*1*
	2.2 Loads and Duty Cycle	*1*
3.0	Bearing Oscillating Life	4
	3.1 Dynamic Equivalent Loads, Moment and Speed	*4*
	3.2 Thrust Basic Dynamic Capacity in Rotation	*5*
	3.3 B-10 life in Oscillation	*6*
	3.4 Pro-Rated Bearing Life	*8*
4.0	Bearing Static Capacity	9
	4.1 Maximum Ball Load	*9*
	4.2 Contact Ellipse Dimensions	*10*
	4.3 Hertz Contact Stress and Static Factor	*12*
5.0	Case - Core Interface	13
6.0	Surface Model (Lubrication)	16
	6.1 Suggested Hertz Contact Stress Limits	*16*
	6.2 Dither Angle	*17*
	6.3 Lubrication, a3, Life Adjustment Factor	*18*
7.0	Non-Rolling Items and Friction Torque	18
	7.1 Friction Torque	*18*
	7.2 Non-Rolling Items	*19*
8.0	Summary	20
	Appendix B-1 Dyn Equiv Load – Genrol Printout Sheets	
	Appendix B-2 Limit Load – Genrol Printout Sheets	

LIST OF FIGURES

Figure	Page
1. Pitch Bearing Coordinates and Loads	1
2. Subsurface Shear Stress for Limit Load Case	15
3. Subsurface Shear Stress for Load case 3	15

LIST OF TABLES

Table	Page
1. Pitch Bearing Dimensions	2
2. Loads, Moments and Duty Cycle	3
3. Dynamic Equivalent Load Case	5
4. Thrust Dynamic Capacity for Rotation	5
5. Dynamic Capacity in Oscillation	6
6. Dynamic Equivalent Thrust Load	7
7. B10 Life in Oscillation	8
8. Pro-Rated B10 life in Oscillation	9
9. Maximum Ball Load	10
10. Contact Ellipse Dimensions	11
11. Hertz Contact Stress an SF	12
12. Calculation of Subsurface Shear Stress, Ss	14
13. Suggested Hertz Contact Stress Limits	16
14. Dither Amplitude	17
15. Estimated Running Friction Torque	19

1.0 Introduction

John H. Rumbarger, P.E., Inc., JHRINC, submitted Report C-0069-1 (dated Feb. 28, 2000) to the National Renewable Energy Laboratory, NREL. Report C-0069-1 contained the methodology and detailed "how to" information for the life rating of wind turbine yaw and pitch bearings. This report uses the methodology of Report C-0069-1 to life rate a large diameter, blade retention pitch bearing designed for a large wind turbine. The equation numbers used in this report refer to the equations in Report NREL DG03. All equation numbers, figure numbers or table numbers, which refer to Report NREL DG03, will be followed by an asterisk.

The pitch bearing example will be evaluated using hand calculations and the equations from Report NREL DG03. The pitch bearing example will also be computer evaluated using the JHRINC computer program GENROL. Computer print out sheets for the Dynamic Equivalent Load Case and the Limit Load Case are contained in Appendices B-1 and B-2. The pitch bearing coordinate system and load application are shown in Figure 1.

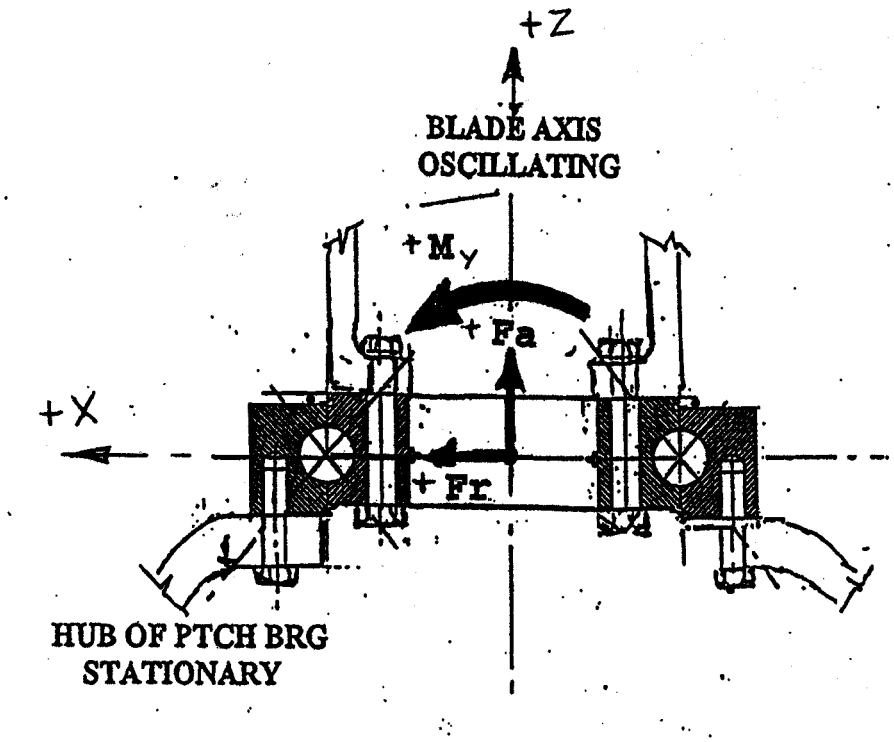

Figure 1.
Pitch Bearing Coordinates and Loads

2.0 Pitch Bearing Example

2.1 Pitch Bearing Type and Dimensions

The pitch bearing is a four-point contact ball bearing with the dimensions and internal details defined in Table 1.

Table 1.
Pitch Bearing Dimensions

Dimensions	Units	
Pitch Diameter	(Inch)	37.00
Ball Diameter	(Inch)	1.75
Number of balls		52
Contact Angle	(Degrees)	45.00
Curvatures		0.52
Internal Clear	(Inch)	0.00
Case-Core		
Ball Path Hard	(HRC)	58 Min.
Core Hard	(BHN)	250 Min
Case Depth	(Inch)	0.25

2.2 Loads and Duty Cycle

The loads, moments and duty cycle are specified in Table 2. The loads were derived by the wind turbine designer from detailed load studies of (rainflow) cycles vs. load. (Refer to NREL DG 01 for determination of wind turbine loads.) The loads are applied to the inner race as shown in Figure 1.

Table 2.
Loads, Moments and Duty Cycle

Load Case	Wind Speed (MPH)	% Time	Speed Osc/Min. (OPM)	Oscillation Amplitude (Degrees)	Radial Load (Lbs) **Fr**	Axial Load (Lbs) **Fa**	Moment (In-Lbs) **M**
1	14	37.745	13.5	0.552	3,003	7,300	1,921,365
2	20	15.964	19.9	0.792	5,611	14,546	3,240,327
3	26	13.511	26.2	1.264	5,873	18,884	3,294,221
4	30	17.673	27.7	1.308	5,382	19,867	2,878,772
5	40	13.355	28.4	1.122	4,413	21,128	2,023,633
6	50	1.752	28.5	1.076	4,006	19,877	1,681,051
	Sum	100.000					
Limit Loads					10,546	32,588	8,294,000

LOADS AND MOMENTS APPLIED TO THE INNER RACE
INNER RACE OSCILLATES
OUTER RACE IS STATIONARY

REQUIRED (B10) LIFE IS 20 YEARS AT 4,368 HOURS/YEAR (50 % USE) = 87,360 HOURS

3.0 Bearing Oscillating Life

3.1 Dynamic Equivalent Loads, Moment and Speed

The six individual load cases specified in Table 2. may be reduced to one Dynamic Equivalent Load Case using equation (20*). This simplifies the B10 life calculation to one set of loads, moment, speed and amplitude of oscillation. The resulting Dynamic Equivalent Load Case is given as Table 3.

The dynamic equivalent load formula for the radial load, Fr, thrust load, Fa, and Moment, M, is:

$$P_E = \left[\frac{P_1^3 N_1 t_1 q_1^x + P_2^3 N_2 t_2 q_2^x + ... P_n^3 N_n t_n q_n^x}{N_1 t_1 q_1^x + N_2 t_2 q_2^x + ... N_n t_n q_n^x} \right] \quad (Lb\ or\ IN - LB)$$

$$q < q\,crit$$

$$x = 9/10 \qquad (20a)$$

The equivalent oscillation speed, OPM, is:

$$OPM_E = \left(\frac{N_1 t_1 + N_2 t_2 + ... N_n t_n}{t_1 + t_2 + ... t_n} \right) \qquad (OPM)$$

$$N = OPM$$

$$t = \%\ time \qquad (20b)$$

The equivalent oscillation amplitude, θ, is:

$$q_E = \left[\frac{N_1 t_1 q_1^X + N_2 t_2 q_2^x + ... N_n t_n q_n^x}{N_1 t_1 + N_2 t_2 + ... N_n t_n} \right] \qquad (Deg.)$$

$$q < q\,crit$$

$$x = 9/10 \qquad (20c)$$

Table 3
Dynamic Equivalent Load Case

Speed Osc/Min. (OPM)	Oscillation Amplitude (Degrees)	Radial Load (Lbs) **Fr**	Axial Load (Lbs) **Fa**	Moment (In-Lbs) **M**
21.0	0.995	5,710	18,449	2,784,150

3.2 Thrust Basic Dynamic Capacity in Rotation

The thrust Basic Dynamic Capacity for a rotating bearing is calculated from the AFBMA or ISO standards using Eq. (2*). and Table 1. is 186,322 Lbs. per Table 4. The computer printout sheet Appendix B-1 shows 186,390 Lbs.

Table 4.
Thrust Basic Dynamic Capacity for Rotation

$$C_a = f_{cm}\left(\cos(\alpha)\right)^{0.7} Z^{2/3}\, d^{1.4} \tan(\alpha) \quad (LBS) \qquad (2)$$

Ball Diam	(Inch)	1.75
Pitch Diam	(Inch)	37
Cont Angle	(Degree)	45
Gamma	d*Cos/dm	0.0334
	Gamma	fcm
	0.0300	6,424
	0.0400	6,976
53%	0.0344	6,667
52%	x 1.172 =	7,814
fcm	7,814	52%
Cos(45)^0.7	0.7819	
Z^2/3	13.9316	
d^1.4	2.1890	
Tan(45)	1.0000	
Ca	186,322	Lbs

3.3 B-10 Life in Oscillation

The critical amplitude of oscillation for the inner race of the pitch bearing is 13.4 degrees Equation (13*) and Table 5. All of the specified amplitudes of oscillation (Table 2.) are less than the critical amplitude. The thrust capacity for oscillation is calculated using equation (16*). The results for the dynamic equivalent Load case (Table 3.) are given in Table 5.

$$Ca\ osc = Ca\ rot\left(\frac{180}{q}\right)^{3/10} Z^{0.033} \qquad (Lbs)$$

$$q < q\,crit \tag{16}$$

Table 5.
Dynamic Capacity in Oscillation

Item	Symbol	Unit		Equation
Ball Diam	d	(inch)	1.75	
Pitch Dia	dm	(Inch)	37	
Cont Angle	Alpha	(Degree)	45	
No. of Balls	Z		52	
Gamma=dCos/dm			0.0334	
Critical Inner	Thet-Crit	(Degree)	13.399	(13)*
Critical Outer	Thet-Crit	(Degree)	14.325	(13)*
Dyn Capacity in Oscillation	Ca osc			
Amplitude	Theta	(Degree)	0.995	Table 3
(180/Theta)^1/pe	pe=10/3		4.755923	(16)*
(Z)^t	t=0.033		1.139274	(16)*
Ca Rotation		(Lbs)	186,322	Table 4
Ca osc = Ca rot *(180/Thet)^(1/pe)*z^t			1,009,548	(16)*

* NREL DG03

The dynamic equivalent thrust load, Pa, is calculated per equation (7*) as shown in Table 6.

$$P_a = \left(0.75F_r + F_a + \frac{2M}{dm}\right) \qquad (Lbs\ or\ N) \tag{7}$$

Table 6.
Dynamic Equivalent Thrust Load

	Fr (Lbs)	Fa (Lbs)	M (In-Lbs)	
Dyn Equivnt Load	5,710	18,449	2,784,150	Table 3
Pa = Equiv Thrust Load	=	173,226	Lbs	Eq. (7*)

The B10 life in oscillation (using the dynamic equivalent loads) is calculated per equations (8-11*) and the result is given in Table 7. The hand calculated B10 life is 133,533 Hours. This compares well with the computer result of 112,120 Hours (Appendix B-1). The B10 life exceeds the required 87,600 Hours specified in Table 2.

The pitch bearing (four-point contact ball) design satisfies the B10 fatigue life requirement.

$$B_{10} = a_1 a_2 a_3 \left(\frac{Ca\ osc}{P_a} \right)^3 \frac{x10^6}{60\ x\ OPM} \qquad (Hrs) \qquad (8\text{-}11)$$

Table 7.
B10 Life in Oscillation

(Ca osc/Pa)^3	L10	(Mill Osc)	197.9	(17*)
Life Adjustment Factors				
Reliability	a1	1		
Properties	a2	1		
Structure Effects	a3	0.85		Table (5*)
Adj L10=a1*a2*a3*L10	Lna	(Mill Osc)	168.3	(10*)
Speed of Osc	OPM	21		Table 3
Osc Life B10	B10	(Hours)	133,533	(19*)
* Rreport C-0069-1)				

3.4 Pro-Rated Bearing Life

The B10 life in oscillation was hand calculated for the six load cases, Table 2. The pro-rated B10 life was calculated using equation (11a*). The results are given in Table 8. The pro-rated B10 life of 136,865 hours agrees with the B10 life (Table 7) of 133,533 hours which was calculated using the dynamic equivalent loads and speeds from Table 7.

$$B_{10} = \left(\frac{\frac{\%_1}{{}_1B_{10}} + \frac{\%_2}{{}_2B_{10}} + \ldots \frac{\%_n}{{}_nB_{10}}}{100} \right)^{-1} \quad (Hrs) \qquad (11a)$$

Table 8
Pro-Rated B10 Life in Oscillation

Load Case	% Time	Theta (Degree)	OPM	Fr (Lbs)	Fa (Lbs)	M (In-Lbs)	Pa (Lbs)	B10 Osc (Hours)	%Time/B10
1	37.75	0.552	13.5	3,003	7,300	1,921,356	113,409	1,257,953	3.0009E-05
2	15.96	0.792	19.9	5,611	15,546	3,240,327	194,907	121,479	1.3138E-04
3	13.51	1.264	26.2	5,873	18,884	3,294,221	201,355	54,945	2.4588E-04
4	17.67	1.308	27.7	5,382	19,867	2,878,772	179,513	71,118	2.4846E-04
5	13.36	1.122	28.4	4,413	21,128	2,023,633	133,823	192,213	6.9506E-05
6	1.75	1.076	28.5	4,006	19,877	1,681,051	113,749	323,869	5.4096E-06
	100.00							Sum =	7.3065E-04
							Pro-Rated Life (6 Load Cases)(Hours) =		136,865
							Using DynamicEequiv Loads (Hours) =		133,533

4.0 Bearing Static Capacity

4.1 Maximum Ball Load

The pitch bearing static capacity is based on the maximum Hertz contact stress at the center of the most heavily loaded ball, Qmax. The maximum Hertz contact stress should not exceed 609,000 psi (Table 6*). The most heavily loaded ball is calculated using equation (21*) with results shown in Table 9. The Qmax values agree very favorably with the GENROL computer solutions (Appendix B-2). The maximum ball load for the Limit Load Case is 25,844 Lbs. and this load will be used to calculate the Hertz contact stress.

$$Q\max = \left(\frac{2Fr}{Z\cos\propto} + \frac{F_a}{Z\sin\propto} + \frac{4M}{dmZ\sin\propto} \right) \quad (Lbs\ or\ N) \qquad (21)$$

Table 9.
Maximum Ball Load

Load Case	Radial Fr (Lbs)	Thrust Fa (Lbs)	Moment M (In-Lbs)	Qmax (Lbs)	Qmax GENROL Computer
1	3,003	7,300	1,921,365	6,011	6,264
2	5,611	14,546	3,240,327	10,228	10,330
3	5,873	18,884	3,294,221	10,519	10,532
4	5,382	19,867	2,878,772	9,297	9,322
5	4,413	21,128	2,023,633	6,764	6,793
6	4,006	19,877	1,681,051	5,701	5742
Dyn Equiv	5,710	18,449	2,784,150	8,998	9067
Limit Load	10,546	32,546	8,294,000	25,844	24,675

Z = 52 Balls
Cont. Angle = 45 Degrees
dm = 37.0" Pitch Diameter

4.2 Contact Ellipse Dimensions

The maximum ball load for the limit load case and the maximum ball load under the fatigue loading (Load Case 3, Table 2.) will be used to determine the contact ellipse dimensions. The sum of the contact curvatures and the function F(ρ) are constant for a given bearing geometry. The ball load determines the magnitude, but the relative size (b/a) is determined by the ball and the race geometry. The two quantities needed are Σ(ρ) and F(ρ).

The dimensionless quantities a* and b* are functions of Σ(ρ) and F(ρ). The values for a* and b* are calculated by interpolation from the dimensionless parameters of Table 7*. The results are given in Table 10.

$$\sum r = ra1 + ra2 + rb1 + rb2 \tag{25}$$

$$F(r) = \frac{(ra1 - ra2) + (rb1 - rb2)}{\sum r} \tag{26}$$

Table 10.
Contact Ellipse Dimensions

Load Case		Limit Load	Load Case 3
Qmax	(Lbs)	25,884	10,519
Inner race Curvatures			
Rho a1	+2/d	1.1429	1.1429
Rho a2	+2/d	1.1429	1.1429
Rhob1	1/(dm/2/Cos-d/2)	0.0395	0.0395
Rhob2	-1/(fid)	-1.0989	-1.0989
Sum Rho	a1+a2+b1+b2	1.2264	1.2264
F(Rho)	(a1-a2+b1-b2)/Sum	0.92831	0.92831
Table 7*	F(Rho)	a*	b*
	0.90999	3.233	0.449
	0.93657	3.738	0.417
Interpolation	0.92831	3.581	0.427
Contact Ellipse Dimensions			
a	a =.0045944a*(Q/Sum)^1/3	0.455	0.337
b	b=.0045944b*(Q/Sum)^1/3	0.054	0.040

4.3 Hertz Contact Stress and Static Factor

The maximum Hertz contact stress, Smax, and the Static Factor for the Limit Load Case are given in Table 11.

$$S\max = \frac{1.5Q\max}{p\,ab} \qquad (Lbs\ or\ N) \tag{22}$$

$$SF = \left[\frac{609,000}{S\max}\right]^3 \qquad (English\ Units) \tag{33}$$

Table 11.
Hertz Contact Stress and SF

		Limit Load	Load Case 3
Max Hertz Contact Stress (psi)			
Smax	Smax=1.5Q/(Piab)	501,583	371,527
Smax	GENROL Computer	507,540	382,140
Static Factor	SF = (609,000/Smax)^3	1.79	

The pitch bearing satisfies the static capacity requirement with an **SF = 1.79** > 1.

5.0 Case - Core Interface

The subsurface shear stress at any depth may be calculated from equation (40*) as a function of the dimensionless parameter, Ss(Λ)/b, and the ratio of the ellipse semi-minor to the semi-major axes, b/a. Values are given in Table 12*.

$$S_s = \left(\frac{S_s \wedge}{b} \right) x \frac{b \sum r}{1.2931 x 10^{-7}} \qquad (psi) \qquad (40)$$

The calculations for the Limit Load case and for Load Case 3 are presented in Table 12. The subsurface shear stress is calculated for a depth of 0.275" below the surface. This depth is 110% of the specified case depth of 0.250" minimum.

The calculated subsurface shear stress, Ss, for the Limit Load Case is 44,574 psi. This is less than the allowable yield shear stress of 51,000 psi. The case-core interface is satisfactory from a yield standpoint to prevent core crushing. The GENROL computer generated curve for Ss is shown in Figure 2.

The calculated subsurface shear stress, Ss, for the Load Case 3 (worst fatigue load case) is 23,200 psi. This is less than the allowable fatigue shear stress of 28,000 psi. The case-core interface is satisfactory from a fatigue standpoint. The GENROL computer generated curve for Ss is shown in Figure 3.

Table 12.
Calculation of Subsurface Shear Stress, Ss

Specifications				
Core Hardness (Minimum)	250 BHN			Table 1.
Case Depth (Minimum)	0.250"			Table 1.
Start of Core - 110%*Depth	0.275"			Figure 8.
Allow Yield Shear (psi)	51,000			Table 11.*
Allowable fatigue Shear (psi)	28,000			Table 11.*
Calculated Values	Load Case	Limit Load	Load Case 3	
Smax = Hertz Stress (psi)		501,583	371,527	Table 11
b = contact semi-width (inch)		0.0542	0.0401	Table 10
b/a = ratio ellipse axes		0.1192	0.1192	
Summ (Rho)		1.2264	1.2264	Table 10.
Subsurface Shear Stress Parameter:	Ss,(Lambda)/b			
z/b=start of core/b		5.0738	6.8579	
	z/b	b/a=0.1	b/a=0.2	Table 12.*
	5.0000	0.0920	0.0710	
	6.0000	0.0750	0.0540	
Interpolate	5.0738	0.0907	0.0697	
Ss(Lambda)/b for b/a=0.1192	5.0738	0.0867		
	6.0000	0.075	0.054	Table 12.*
	8.0000	0.051	0.034	
Interpolate	6.8579	0.0647	0.0454	
Ss(Lambda)/b for b/a=0.1192	6.8579	0.0610		
		Limit Load	Load Case 3	
Ss(Lambda)/b for b/a=0.1192		0.0867	0.0610	Table 12*
b contact semi-width		0.0542	0.0401	
Sum (Rho)		1.2264	1.2264	
c constant		1.2931E-07	1.2931E-07	
Subsurface Shear Stress at Start of Core, Ss				
Ss=(SsLam/b)bSum(Rho)/c		44,574	23,200	Eq. (40*)
Allowable Shear Stress (psi)		51,000 Yield	28,000 Fatigue	
Status		OK	OK	

* NREL DG03

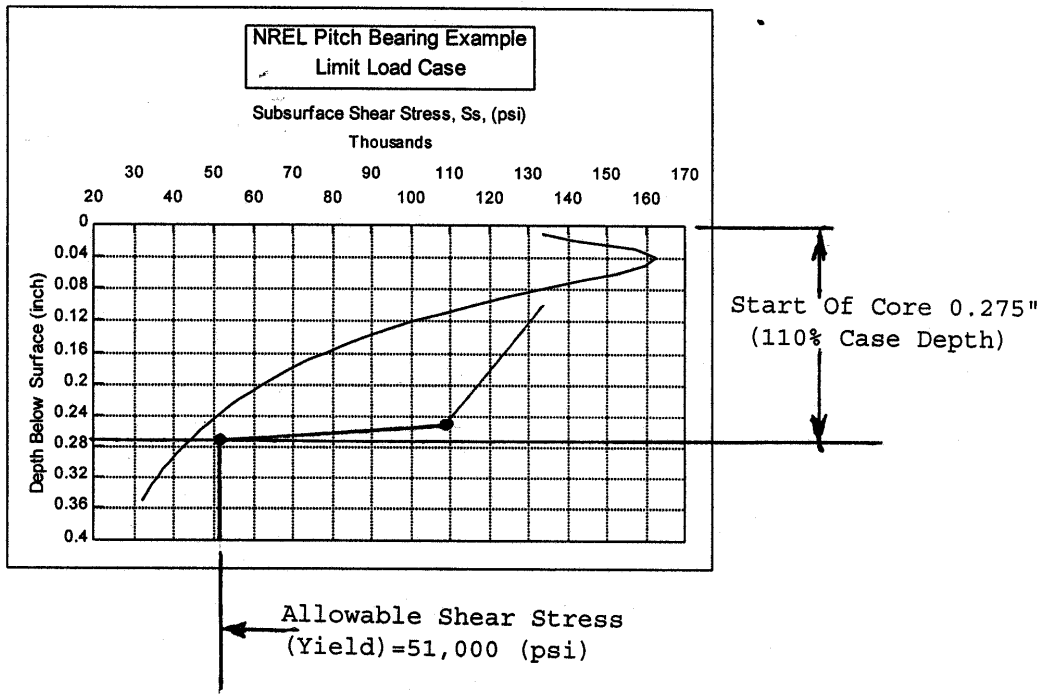

Figure 2.
Subsurface Shear Stress for Limit Load Case

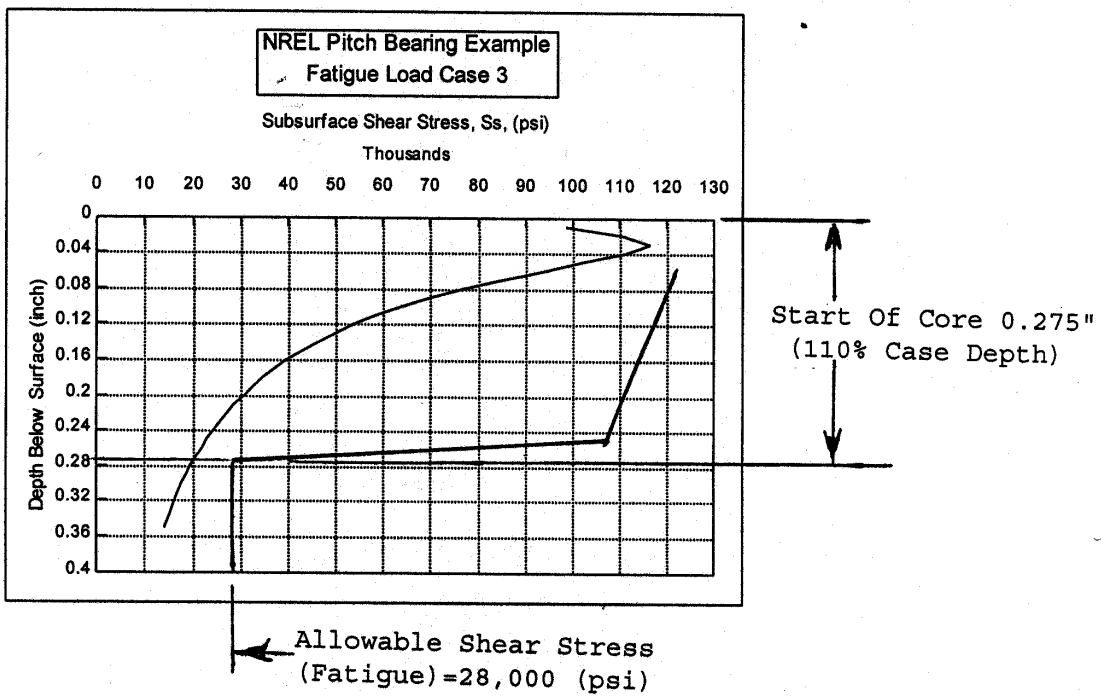

Figure 3.
Subsurface Shear Stress for Load Case 3

6.0 Surface Model (Lubrication)

6.1 Suggested Hertz Contact Stress Limits

Hertz contact stress limits (suggested by one large bearing manufacturer) have been suggested (Table 13.*) as a means to limit fretting corrosion type of failure. These limits have not been accepted as standards (not enough experience base). The relationship of the estimated Hertz contact stresses to the suggested limits is shown in Table 13. The Limit Load Case exceeds the suggested limit for ultimate loading. The Load Case 3 Hertz stress is less than suggested for the maximum operating conditions. The Dynamic Equivalent Load Case Hertz stress exceeds the suggested limit for normal operations.

Since the Load Case 3 Hertz stress is less than the maximum operating condition Hertz stress, the present example is in reasonable agreement with the suggested limits.

Table 13.
Suggested Hertz Contact Stress Limits

Estimated Contact Stress		Suggested Limits		Status
Loading	Max Hertz (psi)	Loading	Max Hertz (psi)	(Rec/Est)^3 SF
Limit Load	501,583	Ultimate	464,000	0.79
Load Case 3	371,527	Max. Operating	406,000	1.30
Dyn. Eq. Load	363,500	Operating	348,000	0.88

6.2 Dither Angle

The angle, θdith, is the dither angle. This is a zone of operation, at very small angular amplitude of oscillation, where the stresses area (footprint) between the ball and the race is only partially uncovered and retraced. The amplitude is defined as the width of the contact footprint divided by the radius of the rolling path. The dither angle, θdith, for the inner race contact is given in Table 14. All of the amplitudes of oscillation, Table 2., are greater than the dither angle and less than the critical angle, θcrit. All specified motions exceed θdith and have been included in the analysis.

$$q\,dith = \frac{720b}{dm\left(1 \mp g\right)p} \qquad (Degrees) \tag{14}$$

Table 14.
Dither Amplitude

Load Case	b (Inner) (Inch)	Theta Dither (Degree)
3	0.0401	0.26
Limit Load	0.0542	0.35
dm = 37 Gamma =	0.033	

6.3 Lubrication, a3, Life Adjustment Factor

A lubricant selection has not been included in this pitch bearing rating example. The selected grease should be one recommended for oscillating conditions. The grease should also have excellent anti-wear and extreme pressure additive characteristics. Frequent (daily) movement of the blade through a large angle (three times the critical angle or more) is recommended to redistribute grease to the ball path surfaces.

An a3 = 1.0 Life Adjustment Factor for lubrication is recommended.

7.0 Non-Rolling Items and Friction Torque

7.1 Friction Torque

The estimated rolling friction torque is calculated using equation (43*). Starting friction torque or a change in friction torque with a reversal of motion may be 1.5 times the running torque. Estimated running torque values are given in Table 15.

The estimated running friction torque is conservatively high for the purpose of sizing drives and actuators. The actual running friction may be less than the estimated maximums. The torque estimates include integral seal drag, etc.

$$Tq = m\frac{dm}{2}\left[\frac{4.4M}{dm} + T + 2.2R\right] \qquad (M - lbs\ or\ N - M) \tag{43}$$

Table 15.
Estimated Running Friction Torque

Load Case	Radial Fr (Lbs)	Thrust Fa (Lbs)	Moment M (In-Lbs)	Run Torque Tq (In-Lbs)	Run Torque Tq (Ft-Lbs)
1	3,003	7,300	1,921,365	13,453	1,121
2	5,611	14,546	3,240,327	22,879	1,907
3	5,873	18,884	3,294,221	23,507	1,959
4	5,382	19,867	2,878,772	20,760	1,730
5	4,413	21,128	2,023,633	15,067	1,256
6	4,006	19,877	1,681,051	12,687	1,057
Dyn Equiv	5,710	18,449	2,784,150	20,097	1,675
Limit Load	10,546	32,546	8,294,000	57,834	4,820

dm = 37.0" Pitch Diameter
u = 0.003 Coeff Running Friction

7.2 Non-Rolling Items

This numerical example does not include an evaluation of the mounting bolts. Other items such as plastic separators and integral rubbing seal are not subject to numerical analysis. These "non-rolling items" should be covered in the bearing purchase specifications.

8.0 Summary

The pitch bearing example, Table 1, operating under the duty cycle, Table 2., has been evaluated in accordance with the NREL Guideline DG-03.

The pitch bearing meets or exceeds all of the necessary design criteria.

- B10 Life in Oscillation
- Static Capacity
- Adequate Case Depth and Core Hardness
- Satisfactory Lubrication
- Non-Rolling Items

The hand calculations are in excellent agreement with the GENROL computer analysis for the case of zero internal diametral clearance. The use of computer analysis is recommended for cases involving bearing diametral preload or special mounting conditions.

APPENDIX B-1

GENROL Computer Printout Sheets

for

DYNAMIC EQUIVALENT LOAD CASE

ENGLISH UNITS

JOHN H. RUMBARGER, P.E., INC.
(610) 489-6904
8 KENNEY LANE, COLLEGEVILLE, PA 19426

GENROL ROLLING ELEMENT BEARING ANALYSIS PROGRAM (5 DEGREES OF FREEDOM)
ALONG X, ALONG Y, ALONG Z, ABOUT X, ABOUT Y

NREL PITCH BRG EXAMPLE - DYNAMIC EQIVALENT LOAD CASE - APPENDIX B-1

INPUT DATA FOR INDIVIDUAL BEARINGS

BEARING NO.	TYPE OF BEARING	NUMBER OF ELEMENTS	ELEMENT DIA. (IN)	PITCH DIA. (IN)	CONTACT ANGLE (DEG)	RACE CURVATURES OUTER (%)	RACE CURVATURES INNER	DIAMETRAL CLEAR. (IN)	BEARING LOC. (IN)
1	BALL	52	1.7500E+00	3.7000E+01	4.5000E+01	5.2000E-01	5.2000E-01	0.0000E+00	0.0000E+00
2	BALL	52	1.7500E+00	3.7000E+01	-4.5000E+01	5.2000E-01	5.2000E-01	0.0000E+00	0.0000E+00

BEARING NO.	ROLL LENGTH (EFF. IN)	MODULUS OF ELASTICITY RACE (PSI)	MODULUS OF ELASTICITY ELEMENT	POISSONS RATIO RACE	POISSONS RATIO ELEMENT	FATIGUE CONSTANT OUTER	FATIGUE CONSTANT INNER	VALUES OF LAMBDA OUTER	VALUES OF LAMBDA INNER
1	0.0000E+00	3.0000E+07	3.0000E+07	2.5000E-01	2.5000E-01	7.4500E+03	7.4500E+03	9.5000E-01	9.5000E-01
2	0.0000E+00	3.0000E+07	3.0000E+07	2.5000E-01	2.5000E-01	7.4500E+03	7.4500E+03	9.5000E-01	9.5000E-01

BEARING NO.	INITIAL DISPLACEMENTS AT BEARING CENTER ALONG X (IN)	ALONG Y (IN)	ALONG Z (IN)	ABOUT X (RAD)	ABOUT Y (RAD)	AXIAL PRELOAD (LB)	PRELOAD DEFLECTION (IN)	PRELOAD CONTACT ANG. (DEG)	PHASE ANGLE (%)
1	0.0000E+00	0.0000E+00	0.0000E+00	0.0000E+00	0.0000E+00	0.0000E+00	0.0000E+00	0.0000E+00	0.0000E+00
2	0.0000E+00	0.0000E+00	0.0000E+00	0.0000E+00	0.0000E+00	0.0000E+00	0.0000E+00	0.0000E+00	0.0000E+00

BEARING NO.	WEIBULL SLOPE	LOAD-LIFE EXPONENT	AXIAL FLOAT	RADIAL FLOAT	ETA (DEG)	CONE RIB DIA. (IN)	SHOULDER CLEARANCE EC1 (IN)	SHOULDER CLEARANCE EC2	DESIGN H/D OUTER
1	1.1111E+00	3.0000E+00	NO	NO	0.0000E+00	0.0000E+00	0.0000E+00	0.0000E+00	0.0000E+00
2	1.1111E+00	3.0000E+00	NO	NO	0.0000E+00	0.0000E+00	0.0000E+00	0.0000E+00	0.0000E+00

BEARING NO.	CAGE OPENING (IN)	AXIAL SPRING	ROLL CYLN. LENGTH (IN)	CROWN (IN or RAD)	BALL EXP.	LIFE ADJUSTMENT FACTORS RELIABILITY	MATERIAL	LUBRICATION	DESIGN H/D INNER
1	0.0000E+00	NO	0.0000E+00	0.0000E+00	1.40	1.0000E+00	1.0000E+00	8.5000E-01	0.0000E+00
2	0.0000E+00	NO	0.0000E+00	0.0000E+00	1.40	1.0000E+00	1.0000E+00	8.5000E-01	0.0000E+00

ROW 1 HAS 52 ELEMENTS AND WAS MODELED WITH 36 ELEMENTS

ROW 2 HAS 52 ELEMENTS AND WAS MODELED WITH 36 ELEMENTS

INPUT DATA FOR BEARING SYSTEM

EXTERNAL FORCES AND MOMENTS APPLIED TO SHAFT

RPM (RELATIVE)	OPM (OSC/MIN)	AMPL OSC (DEG)	ALONG X F1 (LB)	ALONG Y F2 (LB)	ALONG Z F3 (LB)	ABOUT X F4 (LB-IN)	ABOUT Y F5 (LB-IN)
1.6667E-02	2.1000E+01	9.9500E-01	5.7100E+03	0.0000E+00	1.8449E+04	0.0000E+00	2.7842E+06

INNER RACES ROTATE WITH RESPECT TO LOAD
OUTER RACES STATIONARY WITH RESPECT TO LOAD
PROBLEM IS POSED IN FOLLOWING DEGREES OF FREEDOM
ALONGX,ALONGZ,ABOUTY,

OSCILLATING BEARING B-10 LIFE CALCULATIONS
PER RUMBARGER-JONES 1968 ASME TRANS PAPER

AMPLITUDE OF OSCILLATION (DEG) = 9.9500E-01
OSCILLATIONS PER MINUTE (OPM) = 2.1000E+01
OSC. SYSTEMS LIFE (HRS) = 1.1212E+05

BRG NO.	CRITICAL AMPL OSC. OUTER (DEG)	INNER	OSCILLATION CAPACITY OUTER (LBS)	INNER	OSCILLATION LIFE OUTER (HRS)	INNER	BRG (B-10)
1	1.4325E+01	1.3398E+01	4.3534E+04	3.8107E+04	4.0982E+05	3.1668E+05	1.9129E+05
2	1.4325E+01	1.3398E+01	4.3534E+04	3.8107E+04	5.0265E+05	3.7839E+05	2.3112E+05

ESTIMATE OF BEARING INNER RACE FRICTION TORQUE BASED ON
A COEFFICIENT OF TRACTION TIMES THE SUM OF THE BALL OR ROLLER LOADS

SYSTEM FRICTION TORQUE (IN-LBS) = 1.3411E+04
(FT-LBS) = 1.1176E+03
(HP) = 3.5479E-03

BRG NO.	SUM OF ELEM LOADS (LBS)	FRICTION TORQUE (IN-LBS)	(FT-LBS)	SHAFT (HP)	SHAFT (RPM)	TRACTION COEFFICIENT
1	1.1660E+05	6.2549E+03	5.2124E+02	1.6548E-03	1.6667E-02	3.0000E-03
2	1.3339E+05	7.1558E+03	5.9632E+02	1.8931E-03	1.6667E-02	3.0000E-03

ENGLISH UNITS

OUTPUT DATA FOR BEARING SYSTEM NUMBER OF ITERATIONS = 4

**** LIFE COMPUTED PER AFBMA STANDARDS ****

SYSTEM REACTIONS ON SHAFT AT ORIGIN

HOURS LIFE (B-10)	ALONG X (LB)	ALONG Y (LB)	ALONG Z (LB)	ABOUT X (LB-IN)	ABOUT Y (LB-IN)
5.4503E+05	-5.7100E+03	4.8700E-04	-1.8449E+04	1.6533E-02	-2.7841E+06

DISPLACEMENTS OF REFERENCE LINE AT ORIGIN

ALONG X (IN)	ALONG Y (IN)	ALONG Z (IN)	ABOUT X (RAD)	ABOUT Y (RAD)
2.7102E-03	0.0000E+00	1.9868E-03	0.0000E+00	4.1903E-04

NON-LINEAR SPRING RATES OF SYSTEM AT ORIGIN

DFX/DX (LB/IN)	DFX/DY (LB/IN)	DFX/DZ (LB/IN)	DFX/DALX (LB/RAD)	DFX/DALY (LB/RAD)	DFY/DY (LB/IN)	DFY/DZ (LB/IN)	DFY/DALX (LB/RAD)
-2.4263E+07	0.0000E+00	2.9575E+07	0.0000E+00	-1.4946E+06	0.0000E+00	0.0000E+00	0.0000E+00

NON-LINEAR SPRING RATES (CONTINUED)

DFY/DALY (LB/RAD)	DFZ/DZ (LB/IN)	DFZ/DALX (LB/RAD)	DFZ/DALY (LB/RAD)	DMX/DALX (LB-IN/RAD)	DMX/DALY (LB-IN/RAD)	DMY/DALY (LB-IN/RAD)
0.0000E+00	-5.1855E+07	0.0000E+00	-4.9735E+07	0.0000E+00	0.0000E+00	-1.0472E+10

REACTIONS OF BEARINGS ON SHAFT

BEARING NO.	ALONG X (LB)	ALONG Y (LB)	ALONG Z (LB)	ABOUT X (LB-IN)	ABOUT Y (LB-IN)
1	-6.9110E+04	6.3874E-06	8.4252E+04	1.7660E-02	-1.3418E+06
2	6.3399E+04	4.8061E-04	-1.0270E+05	-1.1149E-03	-1.4457E+06

RELATIVE SHAFT DISPLACEMENTS AT BEARING CENTER

BEARING NO.	ALONG X (IN)	ALONG Y (IN)	ALONG Z (IN)	ABOUT X (RAD)	ABOUT Y (RAD)
1	2.6998E-03	0.0000E+00	1.9868E-03	0.0000E+00	4.1903E-04
2	2.7206E-03	0.0000E+00	1.9868E-03	0.0000E+00	4.1903E-04

BEARING NO.	HOURS LIFE (B-10)	CAPACITY (LB)		EQUIVALENT LOAD (LB)	ISO FACTOR ON CAPACITY
1	9.3455E+05	1.8639E+05	(THRUST)	1.8059E+05	1.3000E+00
2	1.1167E+06	1.8639E+05	(THRUST)	1.7018E+05	1.3000E+00

ENGLISH UNITS

OUTPUT EDIT FOR MAXIMUM LOADED ROLLING ELEMENT

1 OUTPUT DATA FOR BEARING NO. 1 BALL BEARING

BALL NO.	LOCATION ANGLE (DEG)	BALL LOAD (LB)	CONTACT ANGLE (DEG)	LENGTH OF CONTACT AREA OUTER (IN)	LENGTH OF CONTACT AREA INNER	WIDTH OF CONTACT AREA OUTER (IN)	WIDTH OF CONTACT AREA INNER	HERTZ CONTACT STRESS OUTER (MAX.)	HERTZ CONTACT STRESS INNER
36	3.6000E+02	9.0665E+03	4.6639E+01	6.2576E-01	6.2903E-01	7.8468E-02	7.5725E-02	3.5265E+05	3.6352E+05

BALL DEFLECTION CONSTANT = .1939E+08

BALL NO.	MAXIMUM SHEAR STRESS OUTER (PSI)	MAXIMUM SHEAR STRESS INNER	DEPTH TO MAXIMUM SHEAR OUTER (IN)	DEPTH TO MAXIMUM SHEAR INNER	MAX ORTHOGONAL SHEAR OUTER (PSI)	MAX ORTHOGONAL SHEAR INNER	DEPTH TO ORTH. SHEAR OUTER (IN)	DEPTH TO ORTH. SHEAR INNER
36	1.1232E+05	1.1558E+05	2.9888E-02	2.8888E-02	8.7820E+04	9.0555E+04	1.9393E-02	1.8731E-02

BALL NO.	H/D OUTER	H/D INNER	LOCATION OF ELLIPSE TIP OUTER (DEG)	LOCATION OF ELLIPSE TIP INNER	MAX ANG - MIN ANG OUTER (DEG)	MAX ANG - MIN ANG INNER
36	3.1473E-01	3.1564E-01	6.6749E+01	6.6859E+01		

NUMBER OF UNLOADED BALLS = 21
NUMBER OF LOADED BALLS = 15

1 OUTPUT DATA FOR BEARING NO. 1 BALL BEARING

ENGLISH UNITS

BALL NO.	LOCATION ANGLE (DEG)	BALL LOAD (LB)	CONTACT ANGLE (DEG)	LENGTH OF CONTACT AREA OUTER (IN)	LENGTH OF CONTACT AREA INNER	WIDTH OF CONTACT AREA OUTER (IN)	WIDTH OF CONTACT AREA INNER	HERTZ CONTACT STRESS OUTER (MAX.)	HERTZ CONTACT STRESS INNER
1	1.0000E+01	8.8106E+03	4.6601E+01	6.1982E-01	6.2306E-01	7.7723E-02	7.5006E-02	3.4930E+05	3.6007E+05
2	2.0000E+01	8.0658E+03	4.6485E+01	6.0183E-01	6.0498E-01	7.5468E-02	7.2830E-02	3.3916E+05	3.4962E+05
3	3.0000E+01	6.8991E+03	4.6295E+01	5.7129E-01	5.7428E-01	7.1638E-02	6.9134E-02	3.2195E+05	3.3188E+05
4	4.0000E+01	5.4187E+03	4.6032E+01	5.2710E-01	5.2985E-01	6.6096E-02	6.3786E-02	2.9705E+05	3.0621E+05
5	5.0000E+01	3.7697E+03	4.5700E+01	4.6705E-01	4.6949E-01	5.8567E-02	5.6519E-02	2.6321E+05	2.7132E+05
6	6.0000E+01	2.1321E+03	4.5305E+01	3.8624E-01	3.8826E-01	4.8434E-02	4.6741E-02	2.1767E+05	2.2438E+05
7	7.0000E+01	7.3228E+02	4.4855E+01	2.7049E-01	2.7190E-01	3.3919E-02	3.2733E-02	1.5244E+05	1.5714E+05
8	8.0000E+01	0.0000E+00	0.0000E+00	0.0000E+00	0.0000E+00	0.0000E+00	0.0000E+00	0.0000E+00	0.0000E+00
9	9.0000E+01	0.0000E+00	0.0000E+00	0.0000E+00	0.0000E+00	0.0000E+00	0.0000E+00	0.0000E+00	0.0000E+00
10	1.0000E+02	0.0000E+00	0.0000E+00	0.0000E+00	0.0000E+00	0.0000E+00	0.0000E+00	0.0000E+00	0.0000E+00
11	1.1000E+02	0.0000E+00	0.0000E+00	0.0000E+00	0.0000E+00	0.0000E+00	0.0000E+00	0.0000E+00	0.0000E+00
12	1.2000E+02	0.0000E+00	0.0000E+00	0.0000E+00	0.0000E+00	0.0000E+00	0.0000E+00	0.0000E+00	0.0000E+00
13	1.3000E+02	0.0000E+00	0.0000E+00	0.0000E+00	0.0000E+00	0.0000E+00	0.0000E+00	0.0000E+00	0.0000E+00
14	1.4000E+02	0.0000E+00	0.0000E+00	0.0000E+00	0.0000E+00	0.0000E+00	0.0000E+00	0.0000E+00	0.0000E+00
15	1.5000E+02	0.0000E+00	0.0000E+00	0.0000E+00	0.0000E+00	0.0000E+00	0.0000E+00	0.0000E+00	0.0000E+00
16	1.6000E+02	0.0000E+00	0.0000E+00	0.0000E+00	0.0000E+00	0.0000E+00	0.0000E+00	0.0000E+00	0.0000E+00
17	1.7000E+02	0.0000E+00	0.0000E+00	0.0000E+00	0.0000E+00	0.0000E+00	0.0000E+00	0.0000E+00	0.0000E+00
18	1.8000E+02	0.0000E+00	0.0000E+00	0.0000E+00	0.0000E+00	0.0000E+00	0.0000E+00	0.0000E+00	0.0000E+00
19	1.9000E+02	0.0000E+00	0.0000E+00	0.0000E+00	0.0000E+00	0.0000E+00	0.0000E+00	0.0000E+00	0.0000E+00
20	2.0000E+02	0.0000E+00	0.0000E+00	0.0000E+00	0.0000E+00	0.0000E+00	0.0000E+00	0.0000E+00	0.0000E+00
21	2.1000E+02	0.0000E+00	0.0000E+00	0.0000E+00	0.0000E+00	0.0000E+00	0.0000E+00	0.0000E+00	0.0000E+00
22	2.2000E+02	0.0000E+00	0.0000E+00	0.0000E+00	0.0000E+00	0.0000E+00	0.0000E+00	0.0000E+00	0.0000E+00
23	2.3000E+02	0.0000E+00	0.0000E+00	0.0000E+00	0.0000E+00	0.0000E+00	0.0000E+00	0.0000E+00	0.0000E+00
24	2.4000E+02	0.0000E+00	0.0000E+00	0.0000E+00	0.0000E+00	0.0000E+00	0.0000E+00	0.0000E+00	0.0000E+00
25	2.5000E+02	0.0000E+00	0.0000E+00	0.0000E+00	0.0000E+00	0.0000E+00	0.0000E+00	0.0000E+00	0.0000E+00
26	2.6000E+02	0.0000E+00	0.0000E+00	0.0000E+00	0.0000E+00	0.0000E+00	0.0000E+00	0.0000E+00	0.0000E+00
27	2.7000E+02	0.0000E+00	0.0000E+00	0.0000E+00	0.0000E+00	0.0000E+00	0.0000E+00	0.0000E+00	0.0000E+00
28	2.8000E+02	0.0000E+00	0.0000E+00	0.0000E+00	0.0000E+00	0.0000E+00	0.0000E+00	0.0000E+00	0.0000E+00
29	2.9000E+02	7.3228E+02	4.4855E+01	2.7049E-01	2.7190E-01	3.3919E-02	3.2733E-02	1.5244E+05	1.5714E+05
30	3.0000E+02	2.1321E+03	4.5305E+01	3.8624E-01	3.8826E-01	4.8434E-02	4.6741E-02	2.1767E+05	2.2438E+05
31	3.1000E+02	3.7697E+03	4.5700E+01	4.6705E-01	4.6949E-01	5.8567E-02	5.6519E-02	2.6321E+05	2.7132E+05
32	3.2000E+02	5.4187E+03	4.6032E+01	5.2710E-01	5.2985E-01	6.6097E-02	6.3786E-02	2.9705E+05	3.0621E+05
33	3.3000E+02	6.8991E+03	4.6295E+01	5.7129E-01	5.7428E-01	7.1638E-02	6.9134E-02	3.2195E+05	3.3188E+05
34	3.4000E+02	8.0658E+03	4.6485E+01	6.0183E-01	6.0498E-01	7.5468E-02	7.2830E-02	3.3916E+05	3.4962E+05
35	3.5000E+02	8.8106E+03	4.6601E+01	6.1982E-01	6.2306E-01	7.7723E-02	7.5006E-02	3.4930E+05	3.6007E+05
36	3.6000E+02	9.0665E+03	4.6639E+01	6.2576E-01	6.2903E-01	7.8468E-02	7.5725E-02	3.5265E+05	3.6352E+05

BALL NO.	MAXIMUM SHEAR STRESS OUTER (PSI)	MAXIMUM SHEAR STRESS INNER	DEPTH TO MAXIMUM SHEAR OUTER (IN)	DEPTH TO MAXIMUM SHEAR INNER	MAX ORTHOGONAL SHEAR OUTER (PSI)	MAX ORTHOGONAL SHEAR INNER	DEPTH TO ORTH. SHEAR OUTER (IN)	DEPTH TO ORTH. SHEAR INNER
1	1.1125E+05	1.1448E+05	2.9604E-02	2.8614E-02	8.6986E+04	8.9695E+04	1.9208E-02	1.8553E-02
2	1.0802E+05	1.1116E+05	2.8745E-02	2.7784E-02	8.4463E+04	8.7093E+04	1.8651E-02	1.8015E-02
3	1.0254E+05	1.0552E+05	2.7287E-02	2.6374E-02	8.0176E+04	8.2673E+04	1.7705E-02	1.7101E-02
4	9.4610E+04	9.7357E+04	2.5176E-02	2.4333E-02	7.3974E+04	7.6278E+04	1.6335E-02	1.5778E-02
5	8.3831E+04	8.6266E+04	2.2308E-02	2.1561E-02	6.5547E+04	6.7588E+04	1.4474E-02	1.3981E-02
6	6.9327E+04	7.1341E+04	1.8448E-02	1.7831E-02	5.4206E+04	5.5894E+04	1.1970E-02	1.1562E-02
7	4.8551E+04	4.9961E+04	1.2919E-02	1.2487E-02	3.7961E+04	3.9143E+04	8.3827E-03	8.0968E-03
8	0.0000E+00	0.0000E+00	0.0000E+00	0.0000E+00	0.0000E+00	0.0000E+00	0.0000E+00	0.0000E+00
9	0.0000E+00	0.0000E+00	0.0000E+00	0.0000E+00	0.0000E+00	0.0000E+00	0.0000E+00	0.0000E+00
10	0.0000E+00	0.0000E+00	0.0000E+00	0.0000E+00	0.0000E+00	0.0000E+00	0.0000E+00	0.0000E+00
11	0.0000E+00	0.0000E+00	0.0000E+00	0.0000E+00	0.0000E+00	0.0000E+00	0.0000E+00	0.0000E+00

12	0.0000E+00	0.0000E+00	0.0000E+00	0.0000E+00	0.0000E+00	0.0000E+00	0.0000E+00	0.0000E+00
13	0.0000E+00	0.0000E+00	0.0000E+00	0.0000E+00	0.0000E+00	0.0000E+00	0.0000E+00	0.0000E+00
14	0.0000E+00	0.0000E+00	0.0000E+00	0.0000E+00	0.0000E+00	0.0000E+00	0.0000E+00	0.0000E+00
15	0.0000E+00	0.0000E+00	0.0000E+00	0.0000E+00	0.0000E+00	0.0000E+00	0.0000E+00	0.0000E+00
16	0.0000E+00	0.0000E+00	0.0000E+00	0.0000E+00	0.0000E+00	0.0000E+00	0.0000E+00	0.0000E+00
17	0.0000E+00	0.0000E+00	0.0000E+00	0.0000E+00	0.0000E+00	0.0000E+00	0.0000E+00	0.0000E+00
18	0.0000E+00	0.0000E+00	0.0000E+00	0.0000E+00	0.0000E+00	0.0000E+00	0.0000E+00	0.0000E+00
19	0.0000E+00	0.0000E+00	0.0000E+00	0.0000E+00	0.0000E+00	0.0000E+00	0.0000E+00	0.0000E+00
20	0.0000E+00	0.0000E+00	0.0000E+00	0.0000E+00	0.0000E+00	0.0000E+00	0.0000E+00	0.0000E+00
21	0.0000E+00	0.0000E+00	0.0000E+00	0.0000E+00	0.0000E+00	0.0000E+00	0.0000E+00	0.0000E+00
22	0.0000E+00	0.0000E+00	0.0000E+00	0.0000E+00	0.0000E+00	0.0000E+00	0.0000E+00	0.0000E+00
23	0.0000E+00	0.0000E+00	0.0000E+00	0.0000E+00	0.0000E+00	0.0000E+00	0.0000E+00	0.0000E+00
24	0.0000E+00	0.0000E+00	0.0000E+00	0.0000E+00	0.0000E+00	0.0000E+00	0.0000E+00	0.0000E+00
25	0.0000E+00	0.0000E+00	0.0000E+00	0.0000E+00	0.0000E+00	0.0000E+00	0.0000E+00	0.0000E+00
26	0.0000E+00	0.0000E+00	0.0000E+00	0.0000E+00	0.0000E+00	0.0000E+00	0.0000E+00	0.0000E+00
27	0.0000E+00	0.0000E+00	0.0000E+00	0.0000E+00	0.0000E+00	0.0000E+00	0.0000E+00	0.0000E+00
28	0.0000E+00	0.0000E+00	0.0000E+00	0.0000E+00	0.0000E+00	0.0000E+00	0.0000E+00	0.0000E+00
29	4.8551E+04	4.9961E+04	1.2919E-02	1.2487E-02	3.7961E+04	3.9143E+04	8.3827E-03	8.0968E-03
30	6.9327E+04	7.1341E+04	1.8448E-02	1.7831E-02	5.4206E+04	5.5894E+04	1.1970E-02	1.1562E-02
31	8.3831E+04	8.6266E+04	2.2308E-02	2.1561E-02	6.5547E+04	6.7588E+04	1.4474E-02	1.3981E-02
32	9.4610E+04	9.7357E+04	2.5176E-02	2.4333E-02	7.3974E+04	7.6278E+04	1.6335E-02	1.5778E-02
33	1.0254E+05	1.0552E+05	2.7287E-02	2.6374E-02	8.0176E+04	8.2673E+04	1.7705E-02	1.7101E-02
34	1.0802E+05	1.1116E+05	2.8745E-02	2.7784E-02	8.4463E+04	8.7093E+04	1.8651E-02	1.8015E-02
35	1.1125E+05	1.1448E+05	2.9604E-02	2.8614E-02	8.6986E+04	8.9695E+04	1.9208E-02	1.8553E-02
36	1.1232E+05	1.1558E+05	2.9888E-02	2.8888E-02	8.7820E+04	9.0555E+04	1.9393E-02	1.8731E-02

BALL	H/D		LOCATION OF ELLIPSE TIP		MAX ANG - MIN ANG	
NO.	OUTER	INNER	OUTER (DEG)	INNER	OUTER (DEG)	INNER
1	3.1275E-01	3.1365E-01	6.6512E+01	6.6620E+01	2.6690E+01	2.6581E+01
2	3.0680E-01	3.0767E-01	6.5795E+01	6.5900E+01	2.7176E+01	2.7071E+01
3	2.9686E-01	2.9768E-01	6.4589E+01	6.4688E+01	2.8001E+01	2.7902E+01
4	2.8285E-01	2.8358E-01	6.2867E+01	6.2957E+01	2.9197E+01	2.9106E+01
5	2.6449E-01	2.6512E-01	6.0570E+01	6.0649E+01	3.0830E+01	3.0751E+01
6	2.4105E-01	2.4154E-01	5.7558E+01	5.7623E+01	3.3053E+01	3.2988E+01
7	2.0998E-01	2.1030E-01	5.3402E+01	5.3447E+01	3.6308E+01	3.6263E+01
8	0.0000E+00	0.0000E+00	0.0000E+00	0.0000E+00	0.0000E+00	0.0000E+00
9	0.0000E+00	0.0000E+00	0.0000E+00	0.0000E+00	0.0000E+00	0.0000E+00
10	0.0000E+00	0.0000E+00	0.0000E+00	0.0000E+00	0.0000E+00	0.0000E+00
11	0.0000E+00	0.0000E+00	0.0000E+00	0.0000E+00	0.0000E+00	0.0000E+00
12	0.0000E+00	0.0000E+00	0.0000E+00	0.0000E+00	0.0000E+00	0.0000E+00
13	0.0000E+00	0.0000E+00	0.0000E+00	0.0000E+00	0.0000E+00	0.0000E+00
14	0.0000E+00	0.0000E+00	0.0000E+00	0.0000E+00	0.0000E+00	0.0000E+00
15	0.0000E+00	0.0000E+00	0.0000E+00	0.0000E+00	0.0000E+00	0.0000E+00
16	0.0000E+00	0.0000E+00	0.0000E+00	0.0000E+00	0.0000E+00	0.0000E+00
17	0.0000E+00	0.0000E+00	0.0000E+00	0.0000E+00	0.0000E+00	0.0000E+00
18	0.0000E+00	0.0000E+00	0.0000E+00	0.0000E+00	0.0000E+00	0.0000E+00
19	0.0000E+00	0.0000E+00	0.0000E+00	0.0000E+00	0.0000E+00	0.0000E+00
20	0.0000E+00	0.0000E+00	0.0000E+00	0.0000E+00	0.0000E+00	0.0000E+00
21	0.0000E+00	0.0000E+00	0.0000E+00	0.0000E+00	0.0000E+00	0.0000E+00
22	0.0000E+00	0.0000E+00	0.0000E+00	0.0000E+00	0.0000E+00	0.0000E+00
23	0.0000E+00	0.0000E+00	0.0000E+00	0.0000E+00	0.0000E+00	0.0000E+00
24	0.0000E+00	0.0000E+00	0.0000E+00	0.0000E+00	0.0000E+00	0.0000E+00
25	0.0000E+00	0.0000E+00	0.0000E+00	0.0000E+00	0.0000E+00	0.0000E+00
26	0.0000E+00	0.0000E+00	0.0000E+00	0.0000E+00	0.0000E+00	0.0000E+00
27	0.0000E+00	0.0000E+00	0.0000E+00	0.0000E+00	0.0000E+00	0.0000E+00
28	0.0000E+00	0.0000E+00	0.0000E+00	0.0000E+00	0.0000E+00	0.0000E+00
29	2.0998E-01	2.1030E-01	5.3402E+01	5.3447E+01	3.6308E+01	3.6263E+01

30	2.4105E-01	2.4154E-01	5.7558E+01	5.7623E+01	3.3053E+01	3.2988E+01
31	2.6449E-01	2.6512E-01	6.0570E+01	6.0649E+01	3.0830E+01	3.0751E+01
32	2.8285E-01	2.8358E-01	6.2867E+01	6.2957E+01	2.9197E+01	2.9106E+01
33	2.9686E-01	2.9768E-01	6.4589E+01	6.4688E+01	2.8001E+01	2.7902E+01
34	3.0680E-01	3.0767E-01	6.5795E+01	6.5900E+01	2.7176E+01	2.7071E+01
35	3.1275E-01	3.1365E-01	6.6512E+01	6.6620E+01	2.6690E+01	2.6581E+01
36	3.1473E-01	3.1564E-01	6.6749E+01	6.6859E+01	2.6529E+01	2.6420E+01

SUBSURFACE STRESS OUTPUT FOR MAX. LOADED ELEMENT INNER RACE CONTACT

1 SUBSURFACE STRESSES FOR BEARING NO. 1 ELEMENT NO. 36

DEPTH BELOW SURFACE	PERPENDICULAR TO ROLLING DIRECTION PRIN STRESS	ALONG ROLLING DIRECTION PRIN STRESS	VERTICAL INTO RACE PRIN STRESS	SUB-SURFACE SHEAR STRESS (45 DEG)	DISTORTION ENERGY HYPOTHESIS STRESS	OCTAHEDRAL SHEAR STRESS
Z (IN)	SX (PSI)	SY (PSI)	SZ (PSI)	SMAX (PSI)	DEH (PSI)	OCT (PSI)
.010	-.1537E+06	-.1901E+06	-.3513E+06	.9878E+05	.1821E+06	.8585E+05
.020	-.1185E+06	-.9968E+05	-.3208E+06	.1106E+06	.2123E+06	.1001E+06
.030	-.9301E+05	-.5082E+05	-.2836E+06	.1164E+06	.2149E+06	.1013E+06
.040	-.7434E+05	-.2507E+05	-.2479E+06	.1114E+06	.2027E+06	.9557E+05
.050	-.6041E+05	-.1133E+05	-.2167E+06	.1027E+06	.1858E+06	.8758E+05
.060	-.4977E+05	-.3809E+04	-.1906E+06	.9338E+05	.1685E+06	.7945E+05
.070	-.4146E+05	.4011E+03	-.1688E+06	.8461E+05	.1527E+06	.7196E+05
.080	-.3483E+05	.2792E+04	-.1507E+06	.7675E+05	.1386E+06	.6533E+05
.090	-.2946E+05	.4144E+04	-.1355E+06	.6983E+05	.1263E+06	.5952E+05
.100	-.2505E+05	.4884E+04	-.1227E+06	.6378E+05	.1155E+06	.5446E+05
.110	-.2140E+05	.5255E+04	-.1117E+06	.5847E+05	.1061E+06	.5004E+05
.120	-.1833E+05	.5399E+04	-.1022E+06	.5380E+05	.9791E+05	.4616E+05
.130	-.1575E+05	.5402E+04	-.9394E+05	.4967E+05	.9064E+05	.4273E+05
.140	-.1356E+05	.5317E+04	-.8670E+05	.4601E+05	.8418E+05	.3969E+05
.150	-.1168E+05	.5178E+04	-.8030E+05	.4274E+05	.7842E+05	.3697E+05
.160	-.1008E+05	.5008E+04	-.7461E+05	.3981E+05	.7325E+05	.3453E+05
.170	-.8704E+04	.4821E+04	-.6952E+05	.3717E+05	.6859E+05	.3233E+05
.180	-.7515E+04	.4625E+04	-.6494E+05	.3478E+05	.6436E+05	.3034E+05
.190	-.6488E+04	.4427E+04	-.6081E+05	.3262E+05	.6052E+05	.2853E+05
.200	-.5597E+04	.4232E+04	-.5706E+05	.3065E+05	.5702E+05	.2688E+05
.210	-.4823E+04	.4041E+04	-.5364E+05	.2884E+05	.5380E+05	.2536E+05
.220	-.4151E+04	.3857E+04	-.5052E+05	.2719E+05	.5085E+05	.2397E+05
.230	-.3564E+04	.3680E+04	-.4766E+05	.2567E+05	.4813E+05	.2269E+05
.240	-.3053E+04	.3510E+04	-.4503E+05	.2427E+05	.4562E+05	.2150E+05
.250	-.2607E+04	.3349E+04	-.4261E+05	.2298E+05	.4329E+05	.2041E+05
.260	-.2216E+04	.3196E+04	-.4038E+05	.2179E+05	.4113E+05	.1939E+05
.270	-.1874E+04	.3051E+04	-.3830E+05	.2068E+05	.3913E+05	.1844E+05
.280	-.1575E+04	.2914E+04	-.3638E+05	.1965E+05	.3726E+05	.1756E+05
.290	-.1313E+04	.2784E+04	-.3460E+05	.1869E+05	.3551E+05	.1674E+05
.300	-.1083E+04	.2661E+04	-.3294E+05	.1780E+05	.3388E+05	.1597E+05
.310	-.8818E+03	.2546E+04	-.3139E+05	.1697E+05	.3236E+05	.1525E+05
.320	-.7051E+03	.2436E+04	-.2994E+05	.1619E+05	.3093E+05	.1458E+05
.330	-.5500E+03	.2332E+04	-.2859E+05	.1546E+05	.2958E+05	.1395E+05
.340	-.4140E+03	.2234E+04	-.2732E+05	.1478E+05	.2832E+05	.1335E+05
.350	-.2947E+03	.2142E+04	-.2613E+05	.1414E+05	.2714E+05	.1279E+05

OUTPUT EDIT FOR MAXIMUM LOADED ROLLING ELEMENT

2 OUTPUT DATA FOR BEARING NO. 2 BALL BEARING

BALL NO.	LOCATION ANGLE (DEG)	BALL LOAD (LB)	CONTACT ANGLE (DEG)	LENGTH OF CONTACT AREA OUTER (IN)	LENGTH OF CONTACT AREA INNER	WIDTH OF CONTACT AREA OUTER (IN)	WIDTH OF CONTACT AREA INNER	HERTZ CONTACT STRESS OUTER (MAX.)	HERTZ CONTACT STRESS INNER
18	1.8000E+02	7.8807E+03	-5.1708E+01	5.9719E-01	6.0031E-01	7.4886E-02	7.2269E-02	3.3655E+05	3.4693E+05

BALL DEFLECTION CONSTANT = .1939E+08

BALL NO.	MAXIMUM SHEAR STRESS OUTER (PSI)	MAXIMUM SHEAR STRESS INNER	DEPTH TO MAXIMUM SHEAR OUTER (IN)	DEPTH TO MAXIMUM SHEAR INNER	MAX ORTHOGONAL SHEAR OUTER (PSI)	MAX ORTHOGONAL SHEAR INNER	DEPTH TO ORTH. SHEAR OUTER (IN)	DEPTH TO ORTH. SHEAR INNER
18	1.0719E+05	1.1030E+05	2.8524E-02	2.7569E-02	8.3811E+04	8.6422E+04	1.8507E-02	1.7876E-02

BALL NO.	H/D OUTER	H/D INNER	LOCATION OF ELLIPSE TIP OUTER (DEG)	LOCATION OF ELLIPSE TIP INNER	MAX ANG - MIN ANG OUTER (DEG)	MAX ANG - MIN ANG INNER
18	3.4953E-01	3.5042E-01	7.0863E+01	7.0967E+01		

NUMBER OF UNLOADED BALLS = 13
NUMBER OF LOADED BALLS = 23

2 OUTPUT DATA FOR BEARING NO. 2 BALL BEARING

ENGLISH UNITS

BALL NO.	LOCATION ANGLE (DEG)	BALL LOAD (LB)	CONTACT ANGLE (DEG)	LENGTH OF CONTACT AREA OUTER (IN)	LENGTH OF CONTACT AREA INNER	WIDTH OF CONTACT AREA OUTER (IN)	WIDTH OF CONTACT AREA INNER	HERTZ CONTACT STRESS OUTER (MAX.)	HERTZ CONTACT STRESS INNER
1	1.0000E+01	0.0000E+00	0.0000E+00	0.0000E+00	0.0000E+00	0.0000E+00	0.0000E+00	0.0000E+00	0.0000E+00
2	2.0000E+01	0.0000E+00	0.0000E+00	0.0000E+00	0.0000E+00	0.0000E+00	0.0000E+00	0.0000E+00	0.0000E+00
3	3.0000E+01	0.0000E+00	0.0000E+00	0.0000E+00	0.0000E+00	0.0000E+00	0.0000E+00	0.0000E+00	0.0000E+00
4	4.0000E+01	0.0000E+00	0.0000E+00	0.0000E+00	0.0000E+00	0.0000E+00	0.0000E+00	0.0000E+00	0.0000E+00
5	5.0000E+01	0.0000E+00	0.0000E+00	0.0000E+00	0.0000E+00	0.0000E+00	0.0000E+00	0.0000E+00	0.0000E+00
6	6.0000E+01	0.0000E+00	0.0000E+00	0.0000E+00	0.0000E+00	0.0000E+00	0.0000E+00	0.0000E+00	0.0000E+00
7	7.0000E+01	5.2642E+01	-4.4077E+01	1.1247E-01	1.1306E-01	1.4103E-02	1.3610E-02	6.3383E+04	6.5337E+04
8	8.0000E+01	4.2719E+02	-4.5095E+01	2.2601E-01	2.2719E-01	2.8341E-02	2.7351E-02	1.2737E+05	1.3130E+05
9	9.0000E+01	1.0361E+03	-4.6127E+01	3.0367E-01	3.0526E-01	3.8079E-02	3.6748E-02	1.7113E+05	1.7641E+05
10	1.0000E+02	1.8318E+03	-4.7141E+01	3.6719E-01	3.6911E-01	4.6044E-02	4.4435E-02	2.0693E+05	2.1331E+05
11	1.1000E+02	2.7674E+03	-4.8105E+01	4.2133E-01	4.2353E-01	5.2833E-02	5.0986E-02	2.3744E+05	2.4476E+05
12	1.2000E+02	3.7862E+03	-4.8995E+01	4.6773E-01	4.7017E-01	5.8652E-02	5.6602E-02	2.6359E+05	2.7172E+05
13	1.3000E+02	4.8216E+03	-4.9785E+01	5.0698E-01	5.0963E-01	6.3574E-02	6.1352E-02	2.8571E+05	2.9452E+05
14	1.4000E+02	5.8018E+03	-5.0458E+01	5.3924E-01	5.4206E-01	6.7619E-02	6.5255E-02	3.0389E+05	3.1326E+05
15	1.5000E+02	6.6554E+03	-5.0996E+01	5.6448E-01	5.6743E-01	7.0784E-02	6.8310E-02	3.1811E+05	3.2792E+05
16	1.6000E+02	7.3176E+03	-5.1389E+01	5.8262E-01	5.8566E-01	7.3058E-02	7.0505E-02	3.2833E+05	3.3846E+05
17	1.7000E+02	7.7370E+03	-5.1628E+01	5.9354E-01	5.9665E-01	7.4428E-02	7.1827E-02	3.3449E+05	3.4480E+05
18	1.8000E+02	7.8807E+03	-5.1708E+01	5.9719E-01	6.0031E-01	7.4886E-02	7.2269E-02	3.3655E+05	3.4693E+05
19	1.9000E+02	7.7370E+03	-5.1628E+01	5.9354E-01	5.9665E-01	7.4428E-02	7.1827E-02	3.3449E+05	3.4480E+05
20	2.0000E+02	7.3176E+03	-5.1389E+01	5.8262E-01	5.8566E-01	7.3058E-02	7.0505E-02	3.2833E+05	3.3846E+05
21	2.1000E+02	6.6554E+03	-5.0996E+01	5.6448E-01	5.6743E-01	7.0784E-02	6.8310E-02	3.1811E+05	3.2792E+05
22	2.2000E+02	5.8018E+03	-5.0458E+01	5.3924E-01	5.4206E-01	6.7619E-02	6.5255E-02	3.0389E+05	3.1326E+05
23	2.3000E+02	4.8216E+03	-4.9785E+01	5.0698E-01	5.0963E-01	6.3574E-02	6.1352E-02	2.8571E+05	2.9452E+05
24	2.4000E+02	3.7862E+03	-4.8995E+01	4.6773E-01	4.7017E-01	5.8652E-02	5.6602E-02	2.6359E+05	2.7172E+05
25	2.5000E+02	2.7674E+03	-4.8105E+01	4.2133E-01	4.2353E-01	5.2833E-02	5.0986E-02	2.3744E+05	2.4476E+05
26	2.6000E+02	1.8318E+03	-4.7141E+01	3.6719E-01	3.6911E-01	4.6044E-02	4.4435E-02	2.0693E+05	2.1331E+05
27	2.7000E+02	1.0361E+03	-4.6127E+01	3.0367E-01	3.0526E-01	3.8079E-02	3.6748E-02	1.7113E+05	1.7641E+05
28	2.8000E+02	4.2718E+02	-4.5095E+01	2.2601E-01	2.2719E-01	2.8341E-02	2.7351E-02	1.2737E+05	1.3130E+05
29	2.9000E+02	5.2642E+01	-4.4077E+01	1.1247E-01	1.1306E-01	1.4103E-02	1.3610E-02	6.3383E+04	6.5337E+04
30	3.0000E+02	0.0000E+00	0.0000E+00	0.0000E+00	0.0000E+00	0.0000E+00	0.0000E+00	0.0000E+00	0.0000E+00
31	3.1000E+02	0.0000E+00	0.0000E+00	0.0000E+00	0.0000E+00	0.0000E+00	0.0000E+00	0.0000E+00	0.0000E+00
32	3.2000E+02	0.0000E+00	0.0000E+00	0.0000E+00	0.0000E+00	0.0000E+00	0.0000E+00	0.0000E+00	0.0000E+00
33	3.3000E+02	0.0000E+00	0.0000E+00	0.0000E+00	0.0000E+00	0.0000E+00	0.0000E+00	0.0000E+00	0.0000E+00
34	3.4000E+02	0.0000E+00	0.0000E+00	0.0000E+00	0.0000E+00	0.0000E+00	0.0000E+00	0.0000E+00	0.0000E+00
35	3.5000E+02	0.0000E+00	0.0000E+00	0.0000E+00	0.0000E+00	0.0000E+00	0.0000E+00	0.0000E+00	0.0000E+00
36	3.6000E+02	0.0000E+00	0.0000E+00	0.0000E+00	0.0000E+00	0.0000E+00	0.0000E+00	0.0000E+00	0.0000E+00

BALL NO.	MAXIMUM SHEAR STRESS OUTER (PSI)	MAXIMUM SHEAR STRESS INNER	DEPTH TO MAXIMUM SHEAR OUTER (IN)	DEPTH TO MAXIMUM SHEAR INNER	MAX ORTHOGONAL SHEAR OUTER (PSI)	MAX ORTHOGONAL SHEAR INNER	DEPTH TO ORTH. SHEAR OUTER (IN)	DEPTH TO ORTH. SHEAR INNER
1	0.0000E+00	0.0000E+00	0.0000E+00	0.0000E+00	0.0000E+00	0.0000E+00	0.0000E+00	0.0000E+00
2	0.0000E+00	0.0000E+00	0.0000E+00	0.0000E+00	0.0000E+00	0.0000E+00	0.0000E+00	0.0000E+00
3	0.0000E+00	0.0000E+00	0.0000E+00	0.0000E+00	0.0000E+00	0.0000E+00	0.0000E+00	0.0000E+00
4	0.0000E+00	0.0000E+00	0.0000E+00	0.0000E+00	0.0000E+00	0.0000E+00	0.0000E+00	0.0000E+00
5	0.0000E+00	0.0000E+00	0.0000E+00	0.0000E+00	0.0000E+00	0.0000E+00	0.0000E+00	0.0000E+00
6	0.0000E+00	0.0000E+00	0.0000E+00	0.0000E+00	0.0000E+00	0.0000E+00	0.0000E+00	0.0000E+00
7	2.0187E+04	2.0774E+04	5.3719E-03	5.1922E-03	1.5784E+04	1.6276E+04	3.4855E-03	3.3667E-03
8	4.0567E+04	4.1746E+04	1.0795E-02	1.0434E-02	3.1719E+04	3.2707E+04	7.0043E-03	6.7654E-03
9	5.4506E+04	5.6089E+04	1.4504E-02	1.4019E-02	4.2617E+04	4.3945E+04	9.4109E-03	9.0899E-03
10	6.5907E+04	6.7821E+04	1.7538E-02	1.6951E-02	5.1532E+04	5.3137E+04	1.1379E-02	1.0991E-02
11	7.5624E+04	7.7821E+04	2.0124E-02	1.9451E-02	5.9130E+04	6.0971E+04	1.3057E-02	1.2612E-02

12	8.3953E+04	8.6392E+04	2.2340E-02	2.1593E-02	6.5642E+04	6.7686E+04	1.4495E-02	1.4001E-02
13	9.0999E+04	9.3641E+04	2.4215E-02	2.3405E-02	7.1151E+04	7.3367E+04	1.5712E-02	1.5176E-02
14	9.6789E+04	9.9600E+04	2.5756E-02	2.4894E-02	7.5678E+04	7.8035E+04	1.6711E-02	1.6141E-02
15	1.0132E+05	1.0426E+05	2.6961E-02	2.6059E-02	7.9221E+04	8.1688E+04	1.7494E-02	1.6897E-02
16	1.0457E+05	1.0761E+05	2.7827E-02	2.6896E-02	8.1766E+04	8.4312E+04	1.8056E-02	1.7440E-02
17	1.0654E+05	1.0963E+05	2.8349E-02	2.7401E-02	8.3299E+04	8.5893E+04	1.8394E-02	1.7767E-02
18	1.0719E+05	1.1030E+05	2.8524E-02	2.7569E-02	8.3811E+04	8.6422E+04	1.8507E-02	1.7876E-02
19	1.0654E+05	1.0963E+05	2.8349E-02	2.7401E-02	8.3299E+04	8.5893E+04	1.8394E-02	1.7767E-02
20	1.0457E+05	1.0761E+05	2.7827E-02	2.6896E-02	8.1766E+04	8.4312E+04	1.8056E-02	1.7440E-02
21	1.0132E+05	1.0426E+05	2.6961E-02	2.6059E-02	7.9221E+04	8.1688E+04	1.7494E-02	1.6897E-02
22	9.6789E+04	9.9600E+04	2.5756E-02	2.4894E-02	7.5678E+04	7.8035E+04	1.6711E-02	1.6141E-02
23	9.0999E+04	9.3641E+04	2.4215E-02	2.3405E-02	7.1151E+04	7.3367E+04	1.5712E-02	1.5176E-02
24	8.3953E+04	8.6392E+04	2.2340E-02	2.1593E-02	6.5642E+04	6.7686E+04	1.4495E-02	1.4001E-02
25	7.5624E+04	7.7821E+04	2.0124E-02	1.9451E-02	5.9130E+04	6.0971E+04	1.3057E-02	1.2612E-02
26	6.5907E+04	6.7821E+04	1.7538E-02	1.6951E-02	5.1532E+04	5.3137E+04	1.1379E-02	1.0991E-02
27	5.4506E+04	5.6089E+04	1.4504E-02	1.4019E-02	4.2617E+04	4.3945E+04	9.4109E-03	9.0899E-03
28	4.0567E+04	4.1745E+04	1.0795E-02	1.0434E-02	3.1719E+04	3.2707E+04	7.0043E-03	6.7654E-03
29	2.0187E+04	2.0774E+04	5.3719E-03	5.1922E-03	1.5784E+04	1.6276E+04	3.4855E-03	3.3667E-03
30	0.0000E+00	0.0000E+00	0.0000E+00	0.0000E+00	0.0000E+00	0.0000E+00	0.0000E+00	0.0000E+00
31	0.0000E+00	0.0000E+00	0.0000E+00	0.0000E+00	0.0000E+00	0.0000E+00	0.0000E+00	0.0000E+00
32	0.0000E+00	0.0000E+00	0.0000E+00	0.0000E+00	0.0000E+00	0.0000E+00	0.0000E+00	0.0000E+00
33	0.0000E+00	0.0000E+00	0.0000E+00	0.0000E+00	0.0000E+00	0.0000E+00	0.0000E+00	0.0000E+00
34	0.0000E+00	0.0000E+00	0.0000E+00	0.0000E+00	0.0000E+00	0.0000E+00	0.0000E+00	0.0000E+00
35	0.0000E+00	0.0000E+00	0.0000E+00	0.0000E+00	0.0000E+00	0.0000E+00	0.0000E+00	0.0000E+00
36	0.0000E+00	0.0000E+00	0.0000E+00	0.0000E+00	0.0000E+00	0.0000E+00	0.0000E+00	0.0000E+00

BALL	H/D		LOCATION OF ELLIPSE TIP		MAX ANG - MIN ANG	
NO.	OUTER	INNER	OUTER (DEG)	INNER	OUTER (DEG)	INNER
1	0.0000E+00	0.0000E+00	6.6512E+01	6.6620E+01	2.6690E+01	2.6581E+01
2	0.0000E+00	0.0000E+00	6.5795E+01	6.5900E+01	2.7176E+01	2.7071E+01
3	0.0000E+00	0.0000E+00	6.4589E+01	6.4688E+01	2.8001E+01	2.7902E+01
4	0.0000E+00	0.0000E+00	6.2867E+01	6.2957E+01	2.9197E+01	2.9106E+01
5	0.0000E+00	0.0000E+00	6.0570E+01	6.0649E+01	3.0830E+01	3.0751E+01
6	0.0000E+00	0.0000E+00	5.7558E+01	5.7623E+01	3.3053E+01	3.2988E+01
7	1.6950E-01	1.6962E-01	4.7620E+01	4.7639E+01	4.0534E+01	4.0516E+01
8	2.0150E-01	2.0176E-01	5.2229E+01	5.2266E+01	3.7962E+01	3.7924E+01
9	2.2721E-01	2.2759E-01	5.5732E+01	5.5783E+01	3.6522E+01	3.6472E+01
10	2.5047E-01	2.5095E-01	5.8780E+01	5.8842E+01	3.5501E+01	3.5440E+01
11	2.7180E-01	2.7237E-01	6.1491E+01	6.1562E+01	3.4720E+01	3.4649E+01
12	2.9112E-01	2.9177E-01	6.3887E+01	6.3966E+01	3.4103E+01	3.4023E+01
13	3.0816E-01	3.0888E-01	6.5960E+01	6.6047E+01	3.3611E+01	3.3524E+01
14	3.2262E-01	3.2340E-01	6.7692E+01	6.7785E+01	3.3223E+01	3.3130E+01
15	3.3420E-01	3.3503E-01	6.9065E+01	6.9163E+01	3.2928E+01	3.2830E+01
16	3.4265E-01	3.4352E-01	7.0059E+01	7.0160E+01	3.2719E+01	3.2618E+01
17	3.4780E-01	3.4869E-01	7.0661E+01	7.0765E+01	3.2594E+01	3.2491E+01
18	3.4953E-01	3.5042E-01	7.0863E+01	7.0967E+01	3.2553E+01	3.2449E+01
19	3.4780E-01	3.4869E-01	7.0661E+01	7.0765E+01	3.2594E+01	3.2491E+01
20	3.4265E-01	3.4352E-01	7.0059E+01	7.0160E+01	3.2719E+01	3.2618E+01
21	3.3420E-01	3.3503E-01	6.9065E+01	6.9163E+01	3.2928E+01	3.2830E+01
22	3.2262E-01	3.2340E-01	6.7692E+01	6.7785E+01	3.3223E+01	3.3130E+01
23	3.0816E-01	3.0888E-01	6.5960E+01	6.6047E+01	3.3611E+01	3.3524E+01
24	2.9112E-01	2.9177E-01	6.3887E+01	6.3966E+01	3.4103E+01	3.4023E+01
25	2.7180E-01	2.7237E-01	6.1491E+01	6.1562E+01	3.4720E+01	3.4649E+01
26	2.5047E-01	2.5095E-01	5.8780E+01	5.8842E+01	3.5501E+01	3.5440E+01
27	2.2721E-01	2.2759E-01	5.5732E+01	5.5783E+01	3.6522E+01	3.6472E+01
28	2.0149E-01	2.0176E-01	5.2229E+01	5.2266E+01	3.7962E+01	3.7924E+01
29	1.6950E-01	1.6962E-01	4.7620E+01	4.7639E+01	4.0534E+01	4.0516E+01

30	0.0000E+00	0.0000E+00	5.7558E+01	5.7623E+01	3.3053E+01	3.2988E+01
31	0.0000E+00	0.0000E+00	6.0570E+01	6.0649E+01	3.0830E+01	3.0751E+01
32	0.0000E+00	0.0000E+00	6.2867E+01	6.2957E+01	2.9197E+01	2.9106E+01
33	0.0000E+00	0.0000E+00	6.4589E+01	6.4688E+01	2.8001E+01	2.7902E+01
34	0.0000E+00	0.0000E+00	6.5795E+01	6.5900E+01	2.7176E+01	2.7071E+01
35	0.0000E+00	0.0000E+00	6.6512E+01	6.6620E+01	2.6690E+01	2.6581E+01
36	0.0000E+00	0.0000E+00	6.6749E+01	6.6859E+01	2.6529E+01	2.6420E+01

SUBSURFACE STRESS OUTPUT FOR MAX. LOADED ELEMENT INNER RACE CONTACT

2 SUBSURFACE STRESSES FOR BEARING NO. 2 ELEMENT NO. 18

DEPTH BELOW SURFACE	PERPENDICULAR TO ROLLING DIRECTION PRIN STRESS	ALONG ROLLING DIRECTION PRIN STRESS	VERTICAL INTO RACE PRIN STRESS	SUB-SURFACE SHEAR STRESS (45 DEG)	DISTORTION ENERGY HYPOTHESIS STRESS	OCTAHEDRAL SHEAR STRESS
Z (IN)	SX (PSI)	SY (PSI)	SZ (PSI)	SMAX (PSI)	DEH (PSI)	OCT (PSI)
.010	-.1449E+06	-.1761E+06	-.3342E+06	.9465E+05	.1758E+06	.8287E+05
.020	-.1105E+06	-.8928E+05	-.3029E+06	.1068E+06	.2038E+06	.9608E+05
.030	-.8586E+05	-.4394E+05	-.2656E+06	.1108E+06	.2040E+06	.9615E+05
.040	-.6810E+05	-.2075E+05	-.2305E+06	.1049E+06	.1906E+06	.8983E+05
.050	-.5498E+05	-.8690E+04	-.2004E+06	.9588E+05	.1733E+06	.8170E+05
.060	-.4503E+05	-.2239E+04	-.1755E+06	.8663E+05	.1563E+06	.7369E+05
.070	-.3729E+05	.1294E+04	-.1550E+06	.7813E+05	.1410E+06	.6646E+05
.080	-.3115E+05	.3247E+04	-.1380E+06	.7062E+05	.1276E+06	.6013E+05
.090	-.2621E+05	.4314E+04	-.1238E+06	.6406E+05	.1159E+06	.5465E+05
.100	-.2216E+05	.4864E+04	-.1119E+06	.5836E+05	.1058E+06	.4989E+05
.110	-.1882E+05	.5108E+04	-.1017E+06	.5338E+05	.9704E+05	.4575E+05
.120	-.1603E+05	.5167E+04	-.9288E+05	.4902E+05	.8936E+05	.4212E+05
.130	-.1369E+05	.5112E+04	-.8526E+05	.4518E+05	.8259E+05	.3893E+05
.140	-.1171E+05	.4990E+04	-.7857E+05	.4178E+05	.7659E+05	.3611E+05
.150	-.1003E+05	.4828E+04	-.7268E+05	.3875E+05	.7125E+05	.3359E+05
.160	-.8598E+04	.4644E+04	-.6744E+05	.3604E+05	.6646E+05	.3133E+05
.170	-.7372E+04	.4449E+04	-.6276E+05	.3361E+05	.6215E+05	.2930E+05
.180	-.6319E+04	.4252E+04	-.5856E+05	.3141E+05	.5825E+05	.2746E+05
.190	-.5414E+04	.4055E+04	-.5477E+05	.2941E+05	.5471E+05	.2579E+05
.200	-.4633E+04	.3864E+04	-.5133E+05	.2760E+05	.5147E+05	.2426E+05
.210	-.3958E+04	.3680E+04	-.4820E+05	.2594E+05	.4852E+05	.2287E+05
.220	-.3374E+04	.3503E+04	-.4535E+05	.2443E+05	.4580E+05	.2159E+05
.230	-.2868E+04	.3334E+04	-.4274E+05	.2304E+05	.4331E+05	.2041E+05
.240	-.2429E+04	.3174E+04	-.4034E+05	.2176E+05	.4100E+05	.1933E+05
.250	-.2048E+04	.3022E+04	-.3813E+05	.2058E+05	.3887E+05	.1832E+05
.260	-.1716E+04	.2879E+04	-.3610E+05	.1949E+05	.3689E+05	.1739E+05
.270	-.1427E+04	.2744E+04	-.3421E+05	.1848E+05	.3506E+05	.1653E+05
.280	-.1176E+04	.2616E+04	-.3247E+05	.1754E+05	.3335E+05	.1572E+05
.290	-.9564E+03	.2496E+04	-.3085E+05	.1667E+05	.3176E+05	.1497E+05
.300	-.7655E+03	.2383E+04	-.2934E+05	.1586E+05	.3027E+05	.1427E+05
.310	-.5990E+03	.2276E+04	-.2794E+05	.1511E+05	.2889E+05	.1362E+05
.320	-.4539E+03	.2176E+04	-.2663E+05	.1440E+05	.2759E+05	.1300E+05
.330	-.3275E+03	.2081E+04	-.2541E+05	.1374E+05	.2637E+05	.1243E+05
.340	-.2172E+03	.1991E+04	-.2426E+05	.1313E+05	.2522E+05	.1189E+05
.350	-.1214E+03	.1906E+04	-.2319E+05	.1255E+05	.2415E+05	.1138E+05

APPENDIX B-2

GENROL Computer Printout Sheets

for

LIMIT LOAD CASE

ENGLISH UNITS

JOHN H. RUMBARGER, P.E., INC.
(610) 489-6904
8 KENNEY LANE, COLLEGEVILLE, PA 19426

GENROL ROLLING ELEMENT BEARING ANALYSIS PROGRAM (5 DEGREES OF FREEDOM)
ALONG X, ALONG Y, ALONG Z, ABOUT X, ABOUT Y

NREL PITCH BRG EXAMPLE - LIMIT LOAD CASE - APPENDIX B-2

INPUT DATA FOR INDIVIDUAL BEARINGS

BEARING NO.	TYPE OF BEARING	NUMBER OF ELEMENTS	ELEMENT DIA. (IN)	PITCH DIA. (IN)	CONTACT ANGLE (DEG)	RACE CURVATURES OUTER (%)	RACE CURVATURES INNER	DIAMETRAL CLEAR. (IN)	BEARING LOC. (IN)
1	BALL	52	1.7500E+00	3.7000E+01	4.5000E+01	5.2000E-01	5.2000E-01	0.0000E+00	0.0000E+00
2	BALL	52	1.7500E+00	3.7000E+01	-4.5000E+01	5.2000E-01	5.2000E-01	0.0000E+00	0.0000E+00

BEARING NO.	ROLL LENGTH (EFF. IN)	MODULUS OF ELASTICITY RACE (PSI)	MODULUS OF ELASTICITY ELEMENT	POISSONS RATIO RACE	POISSONS RATIO ELEMENT	FATIGUE CONSTANT OUTER	FATIGUE CONSTANT INNER	VALUES OF LAMBDA OUTER	VALUES OF LAMBDA INNER
1	0.0000E+00	3.0000E+07	3.0000E+07	2.5000E-01	2.5000E-01	7.4500E+03	7.4500E+03	9.5000E-01	9.5000E-01
2	0.0000E+00	3.0000E+07	3.0000E+07	2.5000E-01	2.5000E-01	7.4500E+03	7.4500E+03	9.5000E-01	9.5000E-01

BEARING NO.	INITIAL DISPLACEMENTS AT BEARING CENTER ALONG X (IN)	ALONG Y (IN)	ALONG Z (IN)	ABOUT X (RAD)	ABOUT Y (RAD)	AXIAL PRELOAD (LB)	PRELOAD DEFLECTION (IN)	PRELOAD CONTACT ANG. (DEG)	PHASE ANGLE (%)
1	0.0000E+00	0.0000E+00	0.0000E+00	0.0000E+00	0.0000E+00	0.0000E+00	0.0000E+00	0.0000E+00	0.0000E+00
2	0.0000E+00	0.0000E+00	0.0000E+00	0.0000E+00	0.0000E+00	0.0000E+00	0.0000E+00	0.0000E+00	0.0000E+00

BEARING NO.	WEIBULL SLOPE	LOAD-LIFE EXPONENT	AXIAL FLOAT	RADIAL FLOAT	ETA (DEG)	CONE RIB DIA. (IN)	SHOULDER CLEARANCE EC1 (IN)	SHOULDER CLEARANCE EC2	DESIGN H/D OUTER
1	1.1111E+00	3.0000E+00	NO	NO	0.0000E+00	0.0000E+00	0.0000E+00	0.0000E+00	0.0000E+00
2	1.1111E+00	3.0000E+00	NO	NO	0.0000E+00	0.0000E+00	0.0000E+00	0.0000E+00	0.0000E+00

BEARING NO.	CAGE OPENING (IN)	AXIAL SPRING	ROLL CYLN. LENGTH (IN)	CROWN (IN or RAD)	BALL EXP.	LIFE ADJUSTMENT FACTORS RELIABILITY	MATERIAL	LUBRICATION	DESIGN H/D INNER
1	0.0000E+00	NO	0.0000E+00	0.0000E+00	1.40	1.0000E+00	1.0000E+00	8.5000E-01	0.0000E+00
2	0.0000E+00	NO	0.0000E+00	0.0000E+00	1.40	1.0000E+00	1.0000E+00	8.5000E-01	0.0000E+00

ROW 1 HAS 52 ELEMENTS AND WAS MODELED WITH 36 ELEMENTS

ROW 2 HAS 52 ELEMENTS AND WAS MODELED WITH 36 ELEMENTS

INPUT DATA FOR BEARING SYSTEM

EXTERNAL FORCES AND MOMENTS APPLIED TO SHAFT

RPM (RELATIVE)	OPM (OSC/MIN)	AMPL OSC (DEG)	ALONG X F1 (LB)	ALONG Y F2 (LB)	ALONG Z F3 (LB)	ABOUT X F4 (LB-IN)	ABOUT Y F5 (LB-IN)
1.6667E-02	2.1000E+01	9.9500E-01	1.0546E+04	0.0000E+00	3.2588E+04	0.0000E+00	8.2940E+06

INNER RACES ROTATE WITH RESPECT TO LOAD
OUTER RACES STATIONARY WITH RESPECT TO LOAD
PROBLEM IS POSED IN FOLLOWING DEGREES OF FREEDOM
ALONGX,ALONGZ,ABOUTY,

OSCILLATING BEARING B-10 LIFE CALCULATIONS
PER RUMBARGER-JONES 1968 ASME TRANS PAPER

AMPLITUDE OF OSCILLATION (DEG) = 9.9500E-01
OSCILLATIONS PER MINUTE (OPM) = 2.1000E+01
OSC. SYSTEMS LIFE (HRS) = 4.8999E+03

BRG NO.	CRITICAL AMPL OSC. OUTER (DEG)	INNER	OSCILLATION CAPACITY OUTER (LBS)	INNER	OSCILLATION LIFE OUTER (HRS)	INNER	BRG (B-10)
1	1.4325E+01	1.3398E+01	4.3534E+04	3.8107E+04	1.9474E+04	1.4972E+04	9.0632E+03
2	1.4325E+01	1.3398E+01	4.3534E+04	3.8107E+04	1.9938E+04	1.5174E+04	9.2254E+03

ESTIMATE OF BEARING INNER RACE FRICTION TORQUE BASED ON
A COEFFICIENT OF TRACTION TIMES THE SUM OF THE BALL OR ROLLER LOADS

SYSTEM FRICTION TORQUE (IN-LBS) = 3.7254E+04
(FT-LBS) = 3.1045E+03
(HP) = 9.8558E-03

BRG NO.	SUM OF ELEM LOADS (LBS)	FRICTION TORQUE (IN-LBS)	(FT-LBS)	SHAFT (HP)	SHAFT (RPM)	TRACTION COEFFICIENT
1	3.3482E+05	1.7961E+04	1.4968E+03	4.7517E-03	1.6667E-02	3.0000E-03
2	3.5965E+05	1.9293E+04	1.6077E+03	5.1041E-03	1.6667E-02	3.0000E-03

ENGLISH UNITS

OUTPUT DATA FOR BEARING SYSTEM NUMBER OF ITERATIONS = 4

**** LIFE COMPUTED PER AFBMA STANDARDS ****

SYSTEM REACTIONS ON SHAFT AT ORIGIN

HOURS LIFE (B-10)	ALONG X (LB)	ALONG Y (LB)	ALONG Z (LB)	ABOUT X (LB-IN)	ABOUT Y (LB-IN)
2.3835E+04	-1.0547E+04	1.4522E-02	-3.2594E+04	-1.9336E-01	-8.2941E+06

DISPLACEMENTS OF REFERENCE LINE AT ORIGIN

ALONG X (IN)	ALONG Y (IN)	ALONG Z (IN)	ABOUT X (RAD)	ABOUT Y (RAD)
2.4557E-03	0.0000E+00	1.7019E-03	0.0000E+00	8.2757E-04

NON-LINEAR SPRING RATES OF SYSTEM AT ORIGIN

DFX/DX (LB/IN)	DFX/DY (LB/IN)	DFX/DZ (LB/IN)	DFX/DALX (LB/RAD)	DFX/DALY (LB/RAD)	DFY/DY (LB/IN)	DFY/DZ (LB/IN)	DFY/DALX (LB/RAD)
-3.2318E+07	0.0000E+00	4.0312E+07	0.0000E+00	-7.3572E+06	0.0000E+00	0.0000E+00	0.0000E+00

NON-LINEAR SPRING RATES (CONTINUED)

DFY/DALY (LB/RAD)	DFZ/DZ (LB/IN)	DFZ/DALX (LB/RAD)	DFZ/DALY (LB/RAD)	DMX/DALX (LB-IN/RAD)	DMX/DALY (LB-IN/RAD)	DMY/DALY (LB-IN/RAD)
0.0000E+00	-7.7949E+07	0.0000E+00	-6.0726E+07	0.0000E+00	0.0000E+00	-1.6491E+10

REACTIONS OF BEARINGS ON SHAFT

BEARING NO.	ALONG X (LB)	ALONG Y (LB)	ALONG Z (LB)	ABOUT X (LB-IN)	ABOUT Y (LB-IN)
1	-1.8180E+05	9.2511E-03	2.5507E+05	-1.5930E-01	-3.9925E+06
2	1.7125E+05	5.2713E-03	-2.8766E+05	-3.4160E-02	-4.3104E+06

RELATIVE SHAFT DISPLACEMENTS AT BEARING CENTER

BEARING NO.	ALONG X (IN)	ALONG Y (IN)	ALONG Z (IN)	ABOUT X (RAD)	ABOUT Y (RAD)
1	2.4355E-03	0.0000E+00	1.7021E-03	0.0000E+00	8.2758E-04
2	2.4765E-03	0.0000E+00	1.7021E-03	0.0000E+00	8.2758E-04

BEARING NO.	HOURS LIFE (B-10)	CAPACITY (LB)		EQUIVALENT LOAD (LB)	ISO FACTOR ON CAPACITY
1	4.4182E+04	1.8639E+05	(THRUST)	4.9943E+05	1.3000E+00
2	4.4779E+04	1.8639E+05	(THRUST)	4.9720E+05	1.3000E+00

OUTPUT EDIT FOR MAXIMUM LOADED ROLLING ELEMENT

1 OUTPUT DATA FOR BEARING NO. 1 BALL BEARING

BALL NO.	LOCATION ANGLE (DEG)	BALL LOAD (LB)	CONTACT ANGLE (DEG)	LENGTH OF CONTACT AREA OUTER (IN)	LENGTH OF CONTACT AREA INNER	WIDTH OF CONTACT AREA OUTER (IN)	WIDTH OF CONTACT AREA INNER	HERTZ CONTACT STRESS OUTER (MAX.)	HERTZ CONTACT STRESS INNER
36	3.6000E+02	2.4675E+04	5.0556E+01	8.7367E-01	8.7824E-01	1.0956E-01	1.0573E-01	4.9236E+05	5.0754E+05

BALL DEFLECTION CONSTANT = .1939E+08

BALL NO.	MAXIMUM SHEAR STRESS OUTER (PSI)	MAXIMUM SHEAR STRESS INNER	DEPTH TO MAXIMUM SHEAR OUTER (IN)	DEPTH TO MAXIMUM SHEAR INNER	MAX ORTHOGONAL SHEAR OUTER (PSI)	MAX ORTHOGONAL SHEAR INNER	DEPTH TO ORTH. SHEAR OUTER (IN)	DEPTH TO ORTH. SHEAR INNER
36	1.5682E+05	1.6137E+05	4.1729E-02	4.0333E-02	1.2261E+05	1.2643E+05	2.7076E-02	2.6152E-02

BALL NO.	H/D OUTER	H/D INNER	LOCATION OF ELLIPSE TIP OUTER (DEG)	LOCATION OF ELLIPSE TIP INNER	MAX ANG - MIN ANG OUTER (DEG)	MAX ANG - MIN ANG INNER
36	4.2296E-01	4.2442E-01	7.9244E+01	7.9408E+01		

NUMBER OF UNLOADED BALLS = 19
NUMBER OF LOADED BALLS = 17

1 OUTPUT DATA FOR BEARING NO. 1 BALL BEARING

ENGLISH UNITS

BALL NO.	LOCATION ANGLE (DEG)	BALL LOAD (LB)	CONTACT ANGLE (DEG)	LENGTH OF CONTACT AREA OUTER (IN)	LENGTH OF CONTACT AREA INNER	WIDTH OF CONTACT AREA OUTER (IN)	WIDTH OF CONTACT AREA INNER	HERTZ CONTACT STRESS OUTER (MAX.)	HERTZ CONTACT STRESS INNER
1	1.0000E+01	2.4037E+04	5.0472E+01	8.6608E-01	8.7060E-01	1.0860E-01	1.0481E-01	4.8808E+05	5.0313E+05
2	2.0000E+01	2.2179E+04	5.0221E+01	8.4316E-01	8.4757E-01	1.0573E-01	1.0203E-01	4.7516E+05	4.8981E+05
3	3.0000E+01	1.9264E+04	4.9802E+01	8.0447E-01	8.0868E-01	1.0088E-01	9.7352E-02	4.5336E+05	4.6734E+05
4	4.0000E+01	1.5553E+04	4.9216E+01	7.4909E-01	7.5300E-01	9.3933E-02	9.0650E-02	4.2215E+05	4.3516E+05
5	5.0000E+01	1.1387E+04	4.8467E+01	6.7514E-01	6.7867E-01	8.4660E-02	8.1701E-02	3.8047E+05	3.9220E+05
6	6.0000E+01	7.1719E+03	4.7559E+01	5.7873E-01	5.8175E-01	7.2570E-02	7.0034E-02	3.2614E+05	3.3620E+05
7	7.0000E+01	3.3763E+03	4.6501E+01	4.5020E-01	4.5255E-01	5.6454E-02	5.4480E-02	2.5371E+05	2.6153E+05
8	8.0000E+01	5.9388E+02	4.5307E+01	2.5225E-01	2.5357E-01	3.1631E-02	3.0525E-02	1.4215E+05	1.4654E+05
9	9.0000E+01	0.0000E+00	0.0000E+00	0.0000E+00	0.0000E+00	0.0000E+00	0.0000E+00	0.0000E+00	0.0000E+00
10	1.0000E+02	0.0000E+00	0.0000E+00	0.0000E+00	0.0000E+00	0.0000E+00	0.0000E+00	0.0000E+00	0.0000E+00
11	1.1000E+02	0.0000E+00	0.0000E+00	0.0000E+00	0.0000E+00	0.0000E+00	0.0000E+00	0.0000E+00	0.0000E+00
12	1.2000E+02	0.0000E+00	0.0000E+00	0.0000E+00	0.0000E+00	0.0000E+00	0.0000E+00	0.0000E+00	0.0000E+00
13	1.3000E+02	0.0000E+00	0.0000E+00	0.0000E+00	0.0000E+00	0.0000E+00	0.0000E+00	0.0000E+00	0.0000E+00
14	1.4000E+02	0.0000E+00	0.0000E+00	0.0000E+00	0.0000E+00	0.0000E+00	0.0000E+00	0.0000E+00	0.0000E+00
15	1.5000E+02	0.0000E+00	0.0000E+00	0.0000E+00	0.0000E+00	0.0000E+00	0.0000E+00	0.0000E+00	0.0000E+00
16	1.6000E+02	0.0000E+00	0.0000E+00	0.0000E+00	0.0000E+00	0.0000E+00	0.0000E+00	0.0000E+00	0.0000E+00
17	1.7000E+02	0.0000E+00	0.0000E+00	0.0000E+00	0.0000E+00	0.0000E+00	0.0000E+00	0.0000E+00	0.0000E+00
18	1.8000E+02	0.0000E+00	0.0000E+00	0.0000E+00	0.0000E+00	0.0000E+00	0.0000E+00	0.0000E+00	0.0000E+00
19	1.9000E+02	0.0000E+00	0.0000E+00	0.0000E+00	0.0000E+00	0.0000E+00	0.0000E+00	0.0000E+00	0.0000E+00
20	2.0000E+02	0.0000E+00	0.0000E+00	0.0000E+00	0.0000E+00	0.0000E+00	0.0000E+00	0.0000E+00	0.0000E+00
21	2.1000E+02	0.0000E+00	0.0000E+00	0.0000E+00	0.0000E+00	0.0000E+00	0.0000E+00	0.0000E+00	0.0000E+00
22	2.2000E+02	0.0000E+00	0.0000E+00	0.0000E+00	0.0000E+00	0.0000E+00	0.0000E+00	0.0000E+00	0.0000E+00
23	2.3000E+02	0.0000E+00	0.0000E+00	0.0000E+00	0.0000E+00	0.0000E+00	0.0000E+00	0.0000E+00	0.0000E+00
24	2.4000E+02	0.0000E+00	0.0000E+00	0.0000E+00	0.0000E+00	0.0000E+00	0.0000E+00	0.0000E+00	0.0000E+00
25	2.5000E+02	0.0000E+00	0.0000E+00	0.0000E+00	0.0000E+00	0.0000E+00	0.0000E+00	0.0000E+00	0.0000E+00
26	2.6000E+02	0.0000E+00	0.0000E+00	0.0000E+00	0.0000E+00	0.0000E+00	0.0000E+00	0.0000E+00	0.0000E+00
27	2.7000E+02	0.0000E+00	0.0000E+00	0.0000E+00	0.0000E+00	0.0000E+00	0.0000E+00	0.0000E+00	0.0000E+00
28	2.8000E+02	5.9388E+02	4.5307E+01	2.5225E-01	2.5357E-01	3.1631E-02	3.0525E-02	1.4215E+05	1.4654E+05
29	2.9000E+02	3.3763E+03	4.6501E+01	4.5020E-01	4.5255E-01	5.6454E-02	5.4480E-02	2.5371E+05	2.6153E+05
30	3.0000E+02	7.1719E+03	4.7559E+01	5.7873E-01	5.8175E-01	7.2570E-02	7.0034E-02	3.2614E+05	3.3620E+05
31	3.1000E+02	1.1387E+04	4.8467E+01	6.7514E-01	6.7867E-01	8.4660E-02	8.1701E-02	3.8047E+05	3.9221E+05
32	3.2000E+02	1.5553E+04	4.9216E+01	7.4909E-01	7.5300E-01	9.3933E-02	9.0650E-02	4.2215E+05	4.3516E+05
33	3.3000E+02	1.9264E+04	4.9802E+01	8.0447E-01	8.0868E-01	1.0088E-01	9.7352E-02	4.5336E+05	4.6734E+05
34	3.4000E+02	2.2179E+04	5.0221E+01	8.4316E-01	8.4757E-01	1.0573E-01	1.0203E-01	4.7516E+05	4.8981E+05
35	3.5000E+02	2.4037E+04	5.0472E+01	8.6608E-01	8.7060E-01	1.0860E-01	1.0481E-01	4.8808E+05	5.0313E+05
36	3.6000E+02	2.4675E+04	5.0556E+01	8.7367E-01	8.7824E-01	1.0956E-01	1.0573E-01	4.9236E+05	5.0754E+05

BALL NO.	MAXIMUM SHEAR STRESS OUTER (PSI)	MAXIMUM SHEAR STRESS INNER	DEPTH TO MAXIMUM SHEAR OUTER (IN)	DEPTH TO MAXIMUM SHEAR INNER	MAX ORTHOGONAL SHEAR OUTER (PSI)	MAX ORTHOGONAL SHEAR INNER	DEPTH TO ORTH. SHEAR OUTER (IN)	DEPTH TO ORTH. SHEAR INNER
1	1.5545E+05	1.5997E+05	4.1366E-02	3.9982E-02	1.2155E+05	1.2533E+05	2.6840E-02	2.5925E-02
2	1.5134E+05	1.5574E+05	4.0272E-02	3.8924E-02	1.1833E+05	1.2202E+05	2.6130E-02	2.5239E-02
3	1.4440E+05	1.4859E+05	3.8424E-02	3.7138E-02	1.1290E+05	1.1642E+05	2.4931E-02	2.4081E-02
4	1.3445E+05	1.3836E+05	3.5779E-02	3.4581E-02	1.0513E+05	1.0840E+05	2.3215E-02	2.2423E-02
5	1.2118E+05	1.2470E+05	3.2247E-02	3.1168E-02	9.4750E+04	9.7701E+04	2.0923E-02	2.0209E-02
6	1.0388E+05	1.0689E+05	2.7642E-02	2.6717E-02	8.1220E+04	8.3749E+04	1.7935E-02	1.7323E-02
7	8.0807E+04	8.3154E+04	2.1503E-02	2.0783E-02	6.3182E+04	6.5150E+04	1.3952E-02	1.3476E-02
8	4.5276E+04	4.6591E+04	1.2048E-02	1.1645E-02	3.5401E+04	3.6503E+04	7.8173E-03	7.5507E-03
9	0.0000E+00	0.0000E+00	0.0000E+00	0.0000E+00	0.0000E+00	0.0000E+00	0.0000E+00	0.0000E+00
10	0.0000E+00	0.0000E+00	0.0000E+00	0.0000E+00	0.0000E+00	0.0000E+00	0.0000E+00	0.0000E+00
11	0.0000E+00	0.0000E+00	0.0000E+00	0.0000E+00	0.0000E+00	0.0000E+00	0.0000E+00	0.0000E+00

12	0.0000E+00	0.0000E+00	0.0000E+00	0.0000E+00	0.0000E+00	0.0000E+00	0.0000E+00	0.0000E+00
13	0.0000E+00	0.0000E+00	0.0000E+00	0.0000E+00	0.0000E+00	0.0000E+00	0.0000E+00	0.0000E+00
14	0.0000E+00	0.0000E+00	0.0000E+00	0.0000E+00	0.0000E+00	0.0000E+00	0.0000E+00	0.0000E+00
15	0.0000E+00	0.0000E+00	0.0000E+00	0.0000E+00	0.0000E+00	0.0000E+00	0.0000E+00	0.0000E+00
16	0.0000E+00	0.0000E+00	0.0000E+00	0.0000E+00	0.0000E+00	0.0000E+00	0.0000E+00	0.0000E+00
17	0.0000E+00	0.0000E+00	0.0000E+00	0.0000E+00	0.0000E+00	0.0000E+00	0.0000E+00	0.0000E+00
18	0.0000E+00	0.0000E+00	0.0000E+00	0.0000E+00	0.0000E+00	0.0000E+00	0.0000E+00	0.0000E+00
19	0.0000E+00	0.0000E+00	0.0000E+00	0.0000E+00	0.0000E+00	0.0000E+00	0.0000E+00	0.0000E+00
20	0.0000E+00	0.0000E+00	0.0000E+00	0.0000E+00	0.0000E+00	0.0000E+00	0.0000E+00	0.0000E+00
21	0.0000E+00	0.0000E+00	0.0000E+00	0.0000E+00	0.0000E+00	0.0000E+00	0.0000E+00	0.0000E+00
22	0.0000E+00	0.0000E+00	0.0000E+00	0.0000E+00	0.0000E+00	0.0000E+00	0.0000E+00	0.0000E+00
23	0.0000E+00	0.0000E+00	0.0000E+00	0.0000E+00	0.0000E+00	0.0000E+00	0.0000E+00	0.0000E+00
24	0.0000E+00	0.0000E+00	0.0000E+00	0.0000E+00	0.0000E+00	0.0000E+00	0.0000E+00	0.0000E+00
25	0.0000E+00	0.0000E+00	0.0000E+00	0.0000E+00	0.0000E+00	0.0000E+00	0.0000E+00	0.0000E+00
26	0.0000E+00	0.0000E+00	0.0000E+00	0.0000E+00	0.0000E+00	0.0000E+00	0.0000E+00	0.0000E+00
27	0.0000E+00	0.0000E+00	0.0000E+00	0.0000E+00	0.0000E+00	0.0000E+00	0.0000E+00	0.0000E+00
28	4.5276E+04	4.6591E+04	1.2048E-02	1.1645E-02	3.5401E+04	3.6504E+04	7.8173E-03	7.5507E-03
29	8.0807E+04	8.3154E+04	2.1503E-02	2.0783E-02	6.3182E+04	6.5150E+04	1.3952E-02	1.3476E-02
30	1.0388E+05	1.0689E+05	2.7642E-02	2.6717E-02	8.1220E+04	8.3749E+04	1.7935E-02	1.7323E-02
31	1.2118E+05	1.2470E+05	3.2247E-02	3.1168E-02	9.4750E+04	9.7701E+04	2.0923E-02	2.0209E-02
32	1.3445E+05	1.3836E+05	3.5779E-02	3.4581E-02	1.0513E+05	1.0840E+05	2.3215E-02	2.2423E-02
33	1.4440E+05	1.4859E+05	3.8424E-02	3.7138E-02	1.1290E+05	1.1642E+05	2.4931E-02	2.4081E-02
34	1.5134E+05	1.5574E+05	4.0272E-02	3.8924E-02	1.1833E+05	1.2202E+05	2.6130E-02	2.5239E-02
35	1.5545E+05	1.5997E+05	4.1366E-02	3.9982E-02	1.2155E+05	1.2533E+05	2.6840E-02	2.5925E-02
36	1.5682E+05	1.6137E+05	4.1729E-02	4.0333E-02	1.2261E+05	1.2643E+05	2.7076E-02	2.6152E-02

BALL	H/D		LOCATION OF ELLIPSE TIP		MAX ANG - MIN ANG	
NO.	OUTER	INNER	OUTER (DEG)	INNER	OUTER (DEG)	INNER
1	4.1978E-01	4.2123E-01	7.8888E+01	7.9050E+01	2.2057E+01	2.1895E+01
2	4.1028E-01	4.1167E-01	7.7819E+01	7.7976E+01	2.2622E+01	2.2466E+01
3	3.9450E-01	3.9581E-01	7.6035E+01	7.6182E+01	2.3569E+01	2.3421E+01
4	3.7249E-01	3.7367E-01	7.3521E+01	7.3656E+01	2.4912E+01	2.4777E+01
5	3.4421E-01	3.4524E-01	7.0242E+01	7.0361E+01	2.6693E+01	2.6573E+01
6	3.0933E-01	3.1016E-01	6.6100E+01	6.6200E+01	2.9018E+01	2.8918E+01
7	2.6649E-01	2.6710E-01	6.0822E+01	6.0899E+01	3.2179E+01	3.2103E+01
8	2.0904E-01	2.0935E-01	5.3273E+01	5.3315E+01	3.7340E+01	3.7298E+01
9	0.0000E+00	0.0000E+00	0.0000E+00	0.0000E+00	0.0000E+00	0.0000E+00
10	0.0000E+00	0.0000E+00	0.0000E+00	0.0000E+00	0.0000E+00	0.0000E+00
11	0.0000E+00	0.0000E+00	0.0000E+00	0.0000E+00	0.0000E+00	0.0000E+00
12	0.0000E+00	0.0000E+00	0.0000E+00	0.0000E+00	0.0000E+00	0.0000E+00
13	0.0000E+00	0.0000E+00	0.0000E+00	0.0000E+00	0.0000E+00	0.0000E+00
14	0.0000E+00	0.0000E+00	0.0000E+00	0.0000E+00	0.0000E+00	0.0000E+00
15	0.0000E+00	0.0000E+00	0.0000E+00	0.0000E+00	0.0000E+00	0.0000E+00
16	0.0000E+00	0.0000E+00	0.0000E+00	0.0000E+00	0.0000E+00	0.0000E+00
17	0.0000E+00	0.0000E+00	0.0000E+00	0.0000E+00	0.0000E+00	0.0000E+00
18	0.0000E+00	0.0000E+00	0.0000E+00	0.0000E+00	0.0000E+00	0.0000E+00
19	0.0000E+00	0.0000E+00	0.0000E+00	0.0000E+00	0.0000E+00	0.0000E+00
20	0.0000E+00	0.0000E+00	0.0000E+00	0.0000E+00	0.0000E+00	0.0000E+00
21	0.0000E+00	0.0000E+00	0.0000E+00	0.0000E+00	0.0000E+00	0.0000E+00
22	0.0000E+00	0.0000E+00	0.0000E+00	0.0000E+00	0.0000E+00	0.0000E+00
23	0.0000E+00	0.0000E+00	0.0000E+00	0.0000E+00	0.0000E+00	0.0000E+00
24	0.0000E+00	0.0000E+00	0.0000E+00	0.0000E+00	0.0000E+00	0.0000E+00
25	0.0000E+00	0.0000E+00	0.0000E+00	0.0000E+00	0.0000E+00	0.0000E+00
26	0.0000E+00	0.0000E+00	0.0000E+00	0.0000E+00	0.0000E+00	0.0000E+00
27	0.0000E+00	0.0000E+00	0.0000E+00	0.0000E+00	0.0000E+00	0.0000E+00
28	2.0904E-01	2.0935E-01	5.3273E+01	5.3315E+01	3.7340E+01	3.7298E+01
29	2.6649E-01	2.6710E-01	6.0822E+01	6.0899E+01	3.2179E+01	3.2103E+01

30	3.0933E-01	3.1016E-01	6.6100E+01	6.6200E+01	2.9018E+01	2.8918E+01
31	3.4421E-01	3.4524E-01	7.0242E+01	7.0361E+01	2.6693E+01	2.6573E+01
32	3.7249E-01	3.7367E-01	7.3521E+01	7.3656E+01	2.4912E+01	2.4777E+01
33	3.9450E-01	3.9581E-01	7.6035E+01	7.6182E+01	2.3569E+01	2.3421E+01
34	4.1028E-01	4.1167E-01	7.7819E+01	7.7976E+01	2.2622E+01	2.2466E+01
35	4.1978E-01	4.2123E-01	7.8888E+01	7.9050E+01	2.2057E+01	2.1895E+01
36	4.2296E-01	4.2442E-01	7.9244E+01	7.9408E+01	2.1868E+01	2.1704E+01

SUBSURFACE STRESS OUTPUT FOR MAX. LOADED ELEMENT INNER RACE CONTACT

1 SUBSURFACE STRESSES FOR BEARING NO. 1 ELEMENT NO. 36

DEPTH BELOW SURFACE	PERPENDICULAR TO ROLLING DIRECTION PRIN STRESS	ALONG ROLLING DIRECTION PRIN STRESS	VERTICAL INTO RACE PRIN STRESS	SUB-SURFACE SHEAR STRESS (45 DEG)	DISTORTION ENERGY HYPOTHESIS STRESS	OCTAHEDRAL SHEAR STRESS
Z (IN)	SX (PSI)	SY (PSI)	SZ (PSI)	SMAX (PSI)	DEH (PSI)	OCT (PSI)
.010	-.2316E+06	-.3162E+06	-.4986E+06	.1335E+06	.2363E+06	.1114E+06
.020	-.1915E+06	-.2017E+06	-.4742E+06	.1414E+06	.2778E+06	.1309E+06
.030	-.1595E+06	-.1261E+06	-.4404E+06	.1571E+06	.2990E+06	.1410E+06
.040	-.1340E+06	-.7782E+05	-.4031E+06	.1626E+06	.3011E+06	.1419E+06
.050	-.1138E+06	-.4733E+05	-.3664E+06	.1595E+06	.2915E+06	.1374E+06
.060	-.9742E+05	-.2801E+05	-.3324E+06	.1522E+06	.2763E+06	.1303E+06
.070	-.8412E+05	-.1562E+05	-.3021E+06	.1432E+06	.2591E+06	.1221E+06
.080	-.7314E+05	-.7576E+04	-.2753E+06	.1338E+06	.2417E+06	.1139E+06
.090	-.6397E+05	-.2280E+04	-.2518E+06	.1248E+06	.2251E+06	.1061E+06
.100	-.5624E+05	.1238E+04	-.2313E+06	.1163E+06	.2098E+06	.9889E+05
.110	-.4965E+05	.3586E+04	-.2133E+06	.1084E+06	.1957E+06	.9227E+05
.120	-.4399E+05	.5149E+04	-.1974E+06	.1013E+06	.1830E+06	.8625E+05
.130	-.3909E+05	.6179E+04	-.1833E+06	.9475E+05	.1714E+06	.8080E+05
.140	-.3483E+05	.6839E+04	-.1708E+06	.8883E+05	.1609E+06	.7586E+05
.150	-.3109E+05	.7240E+04	-.1596E+06	.8344E+05	.1514E+06	.7137E+05
.160	-.2781E+05	.7460E+04	-.1496E+06	.7853E+05	.1427E+06	.6728E+05
.170	-.2492E+05	.7550E+04	-.1405E+06	.7405E+05	.1348E+06	.6356E+05
.180	-.2235E+05	.7548E+04	-.1323E+06	.6994E+05	.1276E+06	.6014E+05
.190	-.2007E+05	.7481E+04	-.1249E+06	.6617E+05	.1209E+06	.5701E+05
.200	-.1803E+05	.7367E+04	-.1180E+06	.6270E+05	.1148E+06	.5413E+05
.210	-.1621E+05	.7221E+04	-.1118E+06	.5950E+05	.1092E+06	.5147E+05
.220	-.1459E+05	.7053E+04	-.1060E+06	.5654E+05	.1040E+06	.4900E+05
.230	-.1313E+05	.6871E+04	-.1007E+06	.5379E+05	.9911E+05	.4672E+05
.240	-.1182E+05	.6680E+04	-.9580E+05	.5124E+05	.9460E+05	.4459E+05
.250	-.1064E+05	.6483E+04	-.9125E+05	.4886E+05	.9039E+05	.4261E+05
.260	-.9576E+04	.6285E+04	-.8701E+05	.4665E+05	.8647E+05	.4076E+05
.270	-.8617E+04	.6089E+04	-.8307E+05	.4458E+05	.8279E+05	.3903E+05
.280	-.7751E+04	.5894E+04	-.7939E+05	.4264E+05	.7935E+05	.3740E+05
.290	-.6969E+04	.5702E+04	-.7595E+05	.4083E+05	.7611E+05	.3588E+05
.300	-.6260E+04	.5515E+04	-.7272E+05	.3912E+05	.7307E+05	.3444E+05
.310	-.5619E+04	.5334E+04	-.6970E+05	.3752E+05	.7020E+05	.3309E+05
.320	-.5038E+04	.5156E+04	-.6685E+05	.3601E+05	.6749E+05	.3182E+05
.330	-.4512E+04	.4985E+04	-.6418E+05	.3458E+05	.6494E+05	.3061E+05
.340	-.4033E+04	.4820E+04	-.6165E+05	.3324E+05	.6252E+05	.2947E+05
.350	-.3600E+04	.4661E+04	-.5927E+05	.3197E+05	.6023E+05	.2839E+05

OUTPUT EDIT FOR MAXIMUM LOADED ROLLING ELEMENT

2 OUTPUT DATA FOR BEARING NO. 2 BALL BEARING

BALL NO.	LOCATION ANGLE (DEG)	BALL LOAD (LB)	CONTACT ANGLE (DEG)	LENGTH OF CONTACT AREA OUTER (IN)	LENGTH OF CONTACT AREA INNER	WIDTH OF CONTACT AREA OUTER (IN)	WIDTH OF CONTACT AREA INNER	HERTZ CONTACT STRESS OUTER (MAX.)	HERTZ CONTACT STRESS INNER
18	1.8000E+02	2.3817E+04	-5.4749E+01	8.6343E-01	8.6794E-01	1.0827E-01	1.0449E-01	4.8658E+05	5.0159E+05

BALL DEFLECTION CONSTANT = .1939E+08

BALL NO.	MAXIMUM SHEAR STRESS OUTER (PSI)	MAXIMUM SHEAR STRESS INNER	DEPTH TO MAXIMUM SHEAR OUTER (IN)	DEPTH TO MAXIMUM SHEAR INNER	MAX ORTHOGONAL SHEAR OUTER (PSI)	MAX ORTHOGONAL SHEAR INNER	DEPTH TO ORTH. SHEAR OUTER (IN)	DEPTH TO ORTH. SHEAR INNER
18	1.5498E+05	1.5948E+05	4.1240E-02	3.9860E-02	1.2118E+05	1.2495E+05	2.6758E-02	2.5846E-02

BALL NO.	H/D OUTER	H/D INNER	LOCATION OF ELLIPSE TIP OUTER (DEG)	LOCATION OF ELLIPSE TIP INNER	MAX ANG - MIN ANG OUTER (DEG)	MAX ANG - MIN ANG INNER
18	4.5726E-01	4.5871E-01	8.3070E+01	8.3231E+01		

NUMBER OF UNLOADED BALLS = 17
NUMBER OF LOADED BALLS = 19

2 OUTPUT DATA FOR BEARING NO. 2 BALL BEARING

BALL NO.	LOCATION ANGLE (DEG)	BALL LOAD (LB)	CONTACT ANGLE (DEG)	LENGTH OF CONTACT AREA OUTER (IN)	LENGTH OF CONTACT AREA INNER	WIDTH OF CONTACT AREA OUTER (IN)	WIDTH OF CONTACT AREA INNER	HERTZ CONTACT STRESS OUTER (MAX.)	HERTZ CONTACT STRESS INNER
1	1.0000E+01	0.0000E+00	0.0000E+00	0.0000E+00	0.0000E+00	0.0000E+00	0.0000E+00	0.0000E+00	0.0000E+00
2	2.0000E+01	0.0000E+00	0.0000E+00	0.0000E+00	0.0000E+00	0.0000E+00	0.0000E+00	0.0000E+00	0.0000E+00
3	3.0000E+01	0.0000E+00	0.0000E+00	0.0000E+00	0.0000E+00	0.0000E+00	0.0000E+00	0.0000E+00	0.0000E+00
4	4.0000E+01	0.0000E+00	0.0000E+00	0.0000E+00	0.0000E+00	0.0000E+00	0.0000E+00	0.0000E+00	0.0000E+00
5	5.0000E+01	0.0000E+00	0.0000E+00	0.0000E+00	0.0000E+00	0.0000E+00	0.0000E+00	0.0000E+00	0.0000E+00
6	6.0000E+01	0.0000E+00	0.0000E+00	0.0000E+00	0.0000E+00	0.0000E+00	0.0000E+00	0.0000E+00	0.0000E+00
7	7.0000E+01	0.0000E+00	0.0000E+00	0.0000E+00	0.0000E+00	0.0000E+00	0.0000E+00	0.0000E+00	0.0000E+00
8	8.0000E+01	0.0000E+00	0.0000E+00	0.0000E+00	0.0000E+00	0.0000E+00	0.0000E+00	0.0000E+00	0.0000E+00
9	9.0000E+01	8.1994E+02	-4.5968E+01	2.8088E-01	2.8235E-01	3.5222E-02	3.3990E-02	1.5829E+05	1.6317E+05
10	1.0000E+02	2.9671E+03	-4.7667E+01	4.3122E-01	4.3348E-01	5.4074E-02	5.2184E-02	2.4302E+05	2.5051E+05
11	1.1000E+02	5.8852E+03	-4.9241E+01	5.4181E-01	5.4464E-01	6.7941E-02	6.5567E-02	3.0534E+05	3.1475E+05
12	1.2000E+02	9.2803E+03	-5.0654E+01	6.3064E-01	6.3394E-01	7.9080E-02	7.6316E-02	3.5540E+05	3.6635E+05
13	1.3000E+02	1.2860E+04	-5.1881E+01	7.0308E-01	7.0676E-01	8.8164E-02	8.5083E-02	3.9622E+05	4.0844E+05
14	1.4000E+02	1.6324E+04	-5.2902E+01	7.6126E-01	7.6524E-01	9.5460E-02	9.2123E-02	4.2901E+05	4.4224E+05
15	1.5000E+02	1.9381E+04	-5.3706E+01	8.0610E-01	8.1031E-01	1.0108E-01	9.7549E-02	4.5428E+05	4.6828E+05
16	1.6000E+02	2.1773E+04	-5.4284E+01	8.3798E-01	8.4236E-01	1.0508E-01	1.0141E-01	4.7224E+05	4.8680E+05
17	1.7000E+02	2.3295E+04	-5.4632E+01	8.5707E-01	8.6155E-01	1.0747E-01	1.0372E-01	4.8300E+05	4.9789E+05
18	1.8000E+02	2.3817E+04	-5.4749E+01	8.6343E-01	8.6794E-01	1.0827E-01	1.0449E-01	4.8658E+05	5.0159E+05
19	1.9000E+02	2.3295E+04	-5.4632E+01	8.5707E-01	8.6155E-01	1.0747E-01	1.0372E-01	4.8300E+05	4.9789E+05
20	2.0000E+02	2.1773E+04	-5.4284E+01	8.3798E-01	8.4236E-01	1.0508E-01	1.0141E-01	4.7224E+05	4.8680E+05
21	2.1000E+02	1.9381E+04	-5.3706E+01	8.0610E-01	8.1031E-01	1.0108E-01	9.7549E-02	4.5428E+05	4.6828E+05
22	2.2000E+02	1.6324E+04	-5.2902E+01	7.6126E-01	7.6524E-01	9.5460E-02	9.2123E-02	4.2901E+05	4.4224E+05
23	2.3000E+02	1.2860E+04	-5.1881E+01	7.0308E-01	7.0676E-01	8.8164E-02	8.5083E-02	3.9622E+05	4.0844E+05
24	2.4000E+02	9.2803E+03	-5.0654E+01	6.3064E-01	6.3394E-01	7.9080E-02	7.6316E-02	3.5540E+05	3.6635E+05
25	2.5000E+02	5.8852E+03	-4.9241E+01	5.4181E-01	5.4464E-01	6.7941E-02	6.5567E-02	3.0534E+05	3.1475E+05
26	2.6000E+02	2.9671E+03	-4.7667E+01	4.3122E-01	4.3348E-01	5.4074E-02	5.2184E-02	2.4302E+05	2.5051E+05
27	2.7000E+02	8.1994E+02	-4.5968E+01	2.8088E-01	2.8235E-01	3.5222E-02	3.3990E-02	1.5829E+05	1.6317E+05
28	2.8000E+02	0.0000E+00	0.0000E+00	0.0000E+00	0.0000E+00	0.0000E+00	0.0000E+00	0.0000E+00	0.0000E+00
29	2.9000E+02	0.0000E+00	0.0000E+00	0.0000E+00	0.0000E+00	0.0000E+00	0.0000E+00	0.0000E+00	0.0000E+00
30	3.0000E+02	0.0000E+00	0.0000E+00	0.0000E+00	0.0000E+00	0.0000E+00	0.0000E+00	0.0000E+00	0.0000E+00
31	3.1000E+02	0.0000E+00	0.0000E+00	0.0000E+00	0.0000E+00	0.0000E+00	0.0000E+00	0.0000E+00	0.0000E+00
32	3.2000E+02	0.0000E+00	0.0000E+00	0.0000E+00	0.0000E+00	0.0000E+00	0.0000E+00	0.0000E+00	0.0000E+00
33	3.3000E+02	0.0000E+00	0.0000E+00	0.0000E+00	0.0000E+00	0.0000E+00	0.0000E+00	0.0000E+00	0.0000E+00
34	3.4000E+02	0.0000E+00	0.0000E+00	0.0000E+00	0.0000E+00	0.0000E+00	0.0000E+00	0.0000E+00	0.0000E+00
35	3.5000E+02	0.0000E+00	0.0000E+00	0.0000E+00	0.0000E+00	0.0000E+00	0.0000E+00	0.0000E+00	0.0000E+00
36	3.6000E+02	0.0000E+00	0.0000E+00	0.0000E+00	0.0000E+00	0.0000E+00	0.0000E+00	0.0000E+00	0.0000E+00

BALL NO.	MAXIMUM SHEAR STRESS OUTER (PSI)	MAXIMUM SHEAR STRESS INNER	DEPTH TO MAXIMUM SHEAR OUTER (IN)	DEPTH TO MAXIMUM SHEAR INNER	MAX ORTHOGONAL SHEAR OUTER (PSI)	MAX ORTHOGONAL SHEAR INNER	DEPTH TO ORTH. SHEAR OUTER (IN)	DEPTH TO ORTH. SHEAR INNER
1	0.0000E+00	0.0000E+00	0.0000E+00	0.0000E+00	0.0000E+00	0.0000E+00	0.0000E+00	0.0000E+00
2	0.0000E+00	0.0000E+00	0.0000E+00	0.0000E+00	0.0000E+00	0.0000E+00	0.0000E+00	0.0000E+00
3	0.0000E+00	0.0000E+00	0.0000E+00	0.0000E+00	0.0000E+00	0.0000E+00	0.0000E+00	0.0000E+00
4	0.0000E+00	0.0000E+00	0.0000E+00	0.0000E+00	0.0000E+00	0.0000E+00	0.0000E+00	0.0000E+00
5	0.0000E+00	0.0000E+00	0.0000E+00	0.0000E+00	0.0000E+00	0.0000E+00	0.0000E+00	0.0000E+00
6	0.0000E+00	0.0000E+00	0.0000E+00	0.0000E+00	0.0000E+00	0.0000E+00	0.0000E+00	0.0000E+00
7	0.0000E+00	0.0000E+00	0.0000E+00	0.0000E+00	0.0000E+00	0.0000E+00	0.0000E+00	0.0000E+00
8	0.0000E+00	0.0000E+00	0.0000E+00	0.0000E+00	0.0000E+00	0.0000E+00	0.0000E+00	0.0000E+00
9	5.0416E+04	5.1880E+04	1.3416E-02	1.2967E-02	3.9419E+04	4.0647E+04	8.7047E-03	8.4078E-03
10	7.7401E+04	7.9649E+04	2.0597E-02	1.9907E-02	6.0519E+04	6.2404E+04	1.3364E-02	1.2908E-02
11	9.7250E+04	1.0007E+05	2.5879E-02	2.5013E-02	7.6039E+04	7.8407E+04	1.6791E-02	1.6218E [illegible]

12	1.1319E+05	1.1648E+05	3.0121E-02	2.9113E-02	8.8505E+04	9.1262E+04	1.9544E-02	1.8877E-02
13	1.2620E+05	1.2986E+05	3.3581E-02	3.2458E-02	9.8672E+04	1.0174E+05	2.1789E-02	2.1046E-02
14	1.3664E+05	1.4061E+05	3.6360E-02	3.5144E-02	1.0684E+05	1.1016E+05	2.3592E-02	2.2787E-02
15	1.4469E+05	1.4889E+05	3.8502E-02	3.7213E-02	1.1313E+05	1.1665E+05	2.4981E-02	2.4129E-02
16	1.5041E+05	1.5478E+05	4.0024E-02	3.8685E-02	1.1760E+05	1.2127E+05	2.5969E-02	2.5084E-02
17	1.5384E+05	1.5830E+05	4.0936E-02	3.9566E-02	1.2028E+05	1.2403E+05	2.6561E-02	2.5655E-02
18	1.5498E+05	1.5948E+05	4.1240E-02	3.9860E-02	1.2118E+05	1.2495E+05	2.6758E-02	2.5846E-02
19	1.5384E+05	1.5830E+05	4.0936E-02	3.9566E-02	1.2028E+05	1.2403E+05	2.6561E-02	2.5655E-02
20	1.5041E+05	1.5478E+05	4.0024E-02	3.8685E-02	1.1760E+05	1.2127E+05	2.5969E-02	2.5084E-02
21	1.4469E+05	1.4889E+05	3.8502E-02	3.7213E-02	1.1313E+05	1.1665E+05	2.4981E-02	2.4129E-02
22	1.3664E+05	1.4061E+05	3.6360E-02	3.5144E-02	1.0684E+05	1.1016E+05	2.3592E-02	2.2787E-02
23	1.2620E+05	1.2986E+05	3.3581E-02	3.2458E-02	9.8672E+04	1.0174E+05	2.1789E-02	2.1046E-02
24	1.1319E+05	1.1648E+05	3.0121E-02	2.9113E-02	8.8505E+04	9.1262E+04	1.9544E-02	1.8877E-02
25	9.7250E+04	1.0007E+05	2.5879E-02	2.5013E-02	7.6039E+04	7.8407E+04	1.6791E-02	1.6218E-02
26	7.7401E+04	7.9649E+04	2.0597E-02	1.9907E-02	6.0519E+04	6.2404E+04	1.3364E-02	1.2908E-02
27	5.0416E+04	5.1880E+04	1.3416E-02	1.2967E-02	3.9419E+04	4.0647E+04	8.7047E-03	8.4078E-03
28	0.0000E+00	0.0000E+00	0.0000E+00	0.0000E+00	0.0000E+00	0.0000E+00	0.0000E+00	0.0000E+00
29	0.0000E+00	0.0000E+00	0.0000E+00	0.0000E+00	0.0000E+00	0.0000E+00	0.0000E+00	0.0000E+00
30	0.0000E+00	0.0000E+00	0.0000E+00	0.0000E+00	0.0000E+00	0.0000E+00	0.0000E+00	0.0000E+00
31	0.0000E+00	0.0000E+00	0.0000E+00	0.0000E+00	0.0000E+00	0.0000E+00	0.0000E+00	0.0000E+00
32	0.0000E+00	0.0000E+00	0.0000E+00	0.0000E+00	0.0000E+00	0.0000E+00	0.0000E+00	0.0000E+00
33	0.0000E+00	0.0000E+00	0.0000E+00	0.0000E+00	0.0000E+00	0.0000E+00	0.0000E+00	0.0000E+00
34	0.0000E+00	0.0000E+00	0.0000E+00	0.0000E+00	0.0000E+00	0.0000E+00	0.0000E+00	0.0000E+00
35	0.0000E+00	0.0000E+00	0.0000E+00	0.0000E+00	0.0000E+00	0.0000E+00	0.0000E+00	0.0000E+00
36	0.0000E+00	0.0000E+00	0.0000E+00	0.0000E+00	0.0000E+00	0.0000E+00	0.0000E+00	0.0000E+00

BALL	H/D		LOCATION OF ELLIPSE TIP		MAX ANG - MIN ANG	
NO.	OUTER	INNER	OUTER (DEG)	INNER	OUTER (DEG)	INNER
1	0.0000E+00	0.0000E+00	7.8888E+01	7.9050E+01	2.2057E+01	2.1895E+01
2	0.0000E+00	0.0000E+00	7.7819E+01	7.7976E+01	2.2622E+01	2.2466E+01
3	0.0000E+00	0.0000E+00	7.6035E+01	7.6182E+01	2.3569E+01	2.3421E+01
4	0.0000E+00	0.0000E+00	7.3521E+01	7.3656E+01	2.4912E+01	2.4777E+01
5	0.0000E+00	0.0000E+00	7.0242E+01	7.0361E+01	2.6693E+01	2.6573E+01
6	0.0000E+00	0.0000E+00	6.6100E+01	6.6200E+01	2.9018E+01	2.8918E+01
7	0.0000E+00	0.0000E+00	6.0822E+01	6.0899E+01	3.2179E+01	3.2103E+01
8	0.0000E+00	0.0000E+00	5.3273E+01	5.3315E+01	3.7340E+01	3.7298E+01
9	2.2060E-01	2.2095E-01	5.4846E+01	5.4893E+01	3.7090E+01	3.7044E+01
10	2.7086E-01	2.7144E-01	6.1373E+01	6.1446E+01	3.3961E+01	3.3888E+01
11	3.1315E-01	3.1393E-01	6.6560E+01	6.6654E+01	3.1921E+01	3.1828E+01
12	3.5009E-01	3.5103E-01	7.0928E+01	7.1038E+01	3.0380E+01	3.0270E+01
13	3.8196E-01	3.8306E-01	7.4606E+01	7.4731E+01	2.9156E+01	2.9030E+01
14	4.0858E-01	4.0981E-01	7.7628E+01	7.7766E+01	2.8176E+01	2.8038E+01
15	4.2966E-01	4.3099E-01	7.9995E+01	8.0143E+01	2.7416E+01	2.7268E+01
16	4.4492E-01	4.4632E-01	8.1699E+01	8.1854E+01	2.6869E+01	2.6714E+01
17	4.5416E-01	4.5560E-01	8.2726E+01	8.2886E+01	2.6539E+01	2.6379E+01
18	4.5726E-01	4.5871E-01	8.3070E+01	8.3231E+01	2.6428E+01	2.6266E+01
19	4.5416E-01	4.5560E-01	8.2726E+01	8.2886E+01	2.6539E+01	2.6379E+01
20	4.4492E-01	4.4632E-01	8.1699E+01	8.1854E+01	2.6869E+01	2.6714E+01
21	4.2966E-01	4.3098E-01	7.9995E+01	8.0143E+01	2.7416E+01	2.7268E+01
22	4.0858E-01	4.0981E-01	7.7628E+01	7.7766E+01	2.8176E+01	2.8038E+01
23	3.8196E-01	3.8306E-01	7.4606E+01	7.4731E+01	2.9156E+01	2.9030E+01
24	3.5009E-01	3.5103E-01	7.0928E+01	7.1038E+01	3.0380E+01	3.0270E+01
25	3.1315E-01	3.1393E-01	6.6560E+01	6.6654E+01	3.1921E+01	3.1828E+01
26	2.7086E-01	2.7144E-01	6.1373E+01	6.1446E+01	3.3961E+01	3.3888E+01
27	2.2060E-01	2.2095E-01	5.4846E+01	5.4893E+01	3.7090E+01	3.7044E+01
28	0.0000E+00	0.0000E+00	5.3273E+01	5.3315E+01	3.7340E+01	3.7298E+01
29	0.0000E+00	0.0000E+00	6.0822E+01	6.0899E+01	3.2179E+01	3.2103E+01

30	0.0000E+00	0.0000E+00	6.6100E+01	6.6200E+01	2.9018E+01	2.8918E+01
31	0.0000E+00	0.0000E+00	7.0242E+01	7.0361E+01	2.6693E+01	2.6573E+01
32	0.0000E+00	0.0000E+00	7.3521E+01	7.3656E+01	2.4912E+01	2.4777E+01
33	0.0000E+00	0.0000E+00	7.6035E+01	7.6182E+01	2.3569E+01	2.3421E+01
34	0.0000E+00	0.0000E+00	7.7819E+01	7.7976E+01	2.2622E+01	2.2466E+01
35	0.0000E+00	0.0000E+00	7.8888E+01	7.9050E+01	2.2057E+01	2.1895E+01
36	0.0000E+00	0.0000E+00	7.9244E+01	7.9408E+01	2.1868E+01	2.1704E+01

SUBSURFACE STRESS OUTPUT FOR MAX. LOADED ELEMENT INNER RACE CONTACT

2 SUBSURFACE STRESSES FOR BEARING NO. 2 ELEMENT NO. 18

DEPTH BELOW SURFACE	PERPENDICULAR TO ROLLING DIRECTION PRIN STRESS	ALONG ROLLING DIRECTION PRIN STRESS	VERTICAL INTO RACE PRIN STRESS	SUB-SURFACE SHEAR STRESS (45 DEG)	DISTORTION ENERGY HYPOTHESIS STRESS	OCTAHEDRAL SHEAR STRESS
Z (IN)	SX (PSI)	SY (PSI)	SZ (PSI)	SMAX (PSI)	DEH (PSI)	OCT (PSI)
.010	-.2284E+06	-.3109E+06	-.4925E+06	.1321E+06	.2341E+06	.1103E+06
.020	-.1884E+06	-.1971E+06	-.4679E+06	.1398E+06	.2753E+06	.1298E+06
.030	-.1566E+06	-.1225E+06	-.4339E+06	.1557E+06	.2959E+06	.1395E+06
.040	-.1314E+06	-.7514E+05	-.3966E+06	.1607E+06	.2973E+06	.1402E+06
.050	-.1114E+06	-.4539E+05	-.3600E+06	.1573E+06	.2874E+06	.1355E+06
.060	-.9526E+05	-.2662E+05	-.3263E+06	.1498E+06	.2719E+06	.1282E+06
.070	-.8215E+05	-.1464E+05	-.2962E+06	.1408E+06	.2546E+06	.1200E+06
.080	-.7135E+05	-.6892E+04	-.2697E+06	.1314E+06	.2373E+06	.1118E+06
.090	-.6234E+05	-.1811E+04	-.2466E+06	.1224E+06	.2208E+06	.1041E+06
.100	-.5475E+05	.1550E+04	-.2263E+06	.1139E+06	.2056E+06	.9692E+05
.110	-.4829E+05	.3783E+04	-.2086E+06	.1062E+06	.1917E+06	.9038E+05
.120	-.4274E+05	.5262E+04	-.1930E+06	.9912E+05	.1791E+06	.8444E+05
.130	-.3794E+05	.6227E+04	-.1792E+06	.9270E+05	.1677E+06	.7907E+05
.140	-.3377E+05	.6840E+04	-.1669E+06	.8687E+05	.1574E+06	.7420E+05
.150	-.3012E+05	.7206E+04	-.1559E+06	.8157E+05	.1480E+06	.6979E+05
.160	-.2692E+05	.7398E+04	-.1461E+06	.7674E+05	.1395E+06	.6577E+05
.170	-.2409E+05	.7468E+04	-.1372E+06	.7233E+05	.1317E+06	.6211E+05
.180	-.2158E+05	.7450E+04	-.1291E+06	.6830E+05	.1246E+06	.5876E+05
.190	-.1936E+05	.7372E+04	-.1218E+06	.6460E+05	.1181E+06	.5568E+05
.200	-.1738E+05	.7249E+04	-.1151E+06	.6119E+05	.1121E+06	.5285E+05
.210	-.1561E+05	.7097E+04	-.1090E+06	.5805E+05	.1066E+06	.5024E+05
.220	-.1403E+05	.6925E+04	-.1034E+06	.5515E+05	.1015E+06	.4782E+05
.230	-.1261E+05	.6740E+04	-.9817E+05	.5245E+05	.9670E+05	.4558E+05
.240	-.1133E+05	.6546E+04	-.9336E+05	.4995E+05	.9228E+05	.4350E+05
.250	-.1019E+05	.6349E+04	-.8890E+05	.4763E+05	.8816E+05	.4156E+05
.260	-.9161E+04	.6152E+04	-.8476E+05	.4546E+05	.8431E+05	.3974E+05
.270	-.8232E+04	.5955E+04	-.8091E+05	.4343E+05	.8071E+05	.3805E+05
.280	-.7395E+04	.5761E+04	-.7731E+05	.4153E+05	.7733E+05	.3645E+05
.290	-.6638E+04	.5572E+04	-.7394E+05	.3976E+05	.7416E+05	.3496E+05
.300	-.5954E+04	.5386E+04	-.7079E+05	.3809E+05	.7118E+05	.3356E+05
.310	-.5336E+04	.5206E+04	-.6783E+05	.3652E+05	.6837E+05	.3223E+05
.320	-.4776E+04	.5032E+04	-.6505E+05	.3504E+05	.6573E+05	.3098E+05
.330	-.4268E+04	.4863E+04	-.6243E+05	.3365E+05	.6323E+05	.2980E+05
.340	-.3808E+04	.4700E+04	-.5997E+05	.3233E+05	.6086E+05	.2869E+05
.350	-.3391E+04	.4543E+04	-.5764E+05	.3109E+05	.5862E+05	.2763E+05