JOHN DEERE

- Deere Products and Markets
- Recent Engine Development
- NREL RCI-32027
- Next Steps – Future Direction

DEERE NG ENGINE MILESTONES

- **6081 production released in 1996**
  - In response to industry need for reliable / high performance NG engine
  - Initial product development began in 1994
    - » *Generated 1.2 million test miles*
  - Focused approach - transit style school bus only!!!
- **Expanded to other applications in 1999**
  - Medium Duty Truck market in 2000
  - Refuse Truck market in 2001
  - 40’ Transit Bus market in 2002

JDPS NG Engines

8.1L CNG - LNG

Service Class	Fuel Type	Rated Power Hp (kW)	Peak Torque lb-ft (Nm)
Medium Heavy Duty	CNG, LNG	250 (186) @ 2200 RPM	800 (1085) @ 1400 RPM
	CNG, LNG	250 (186) @ 2200 RPM	735 (997) @ 1300 RPM
Heavy Heavy Duty	CNG, LNG	280 (209) @ 2200 RPM	900 (1220) @ 1500 RPM
	CNG, LNG	275 (205) @ 2200 RPM	800 (1085) @ 1400 RPM
Urban Bus	CNG, LNG	280 (209) @ 2200 RPM	900 (1220) @ 1500 RPM
	CNG, LNG	275 (205) @ 2200 RPM	800 (1085) @ 1400 RPM

DEERE PRODUCT FEATURES

- Lean Burn Combustion
- Heavy Duty Engine Features
- Full Authority Electronic Control System

HEAVY-DUTY DIESEL ENGINE PLATFORM

- **8.1 NG engine utilizes Heavy Duty Diesel Platform**
  - Block
  - Crankshaft
  - Large bearing areas
  - Connecting Rods
  - Hardened Wet Liners
  - Low Mount Oil Pump

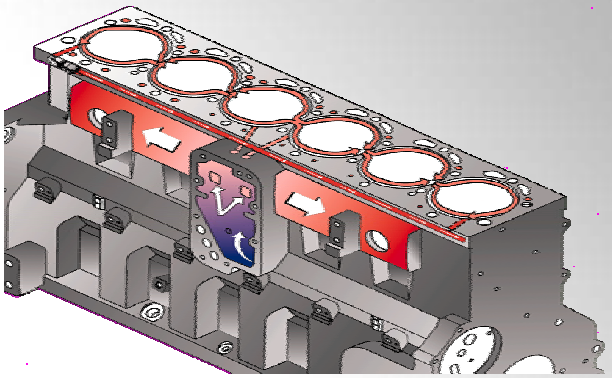

- **Top Liner Cooling**
  - Lowers upper-liner temperature significantly improving life of the power cylinder and head-to-block joint

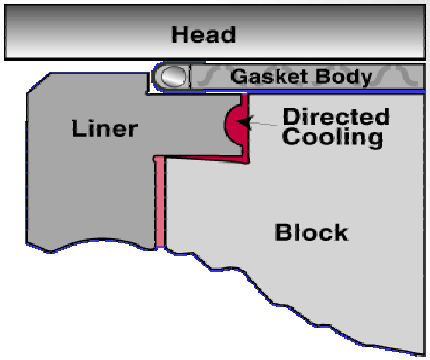

FULL AUTHORITY ELECTRONIC CONTROL SYSTEM

- Adapts to variant ambient conditions – monitors engine and parameters to maximize engine efficiency

  - Closed Loop Fuel Control
  - Adaptive Learn
  - Knock Detection
  - Humidity Sensor
  - Electronic Features

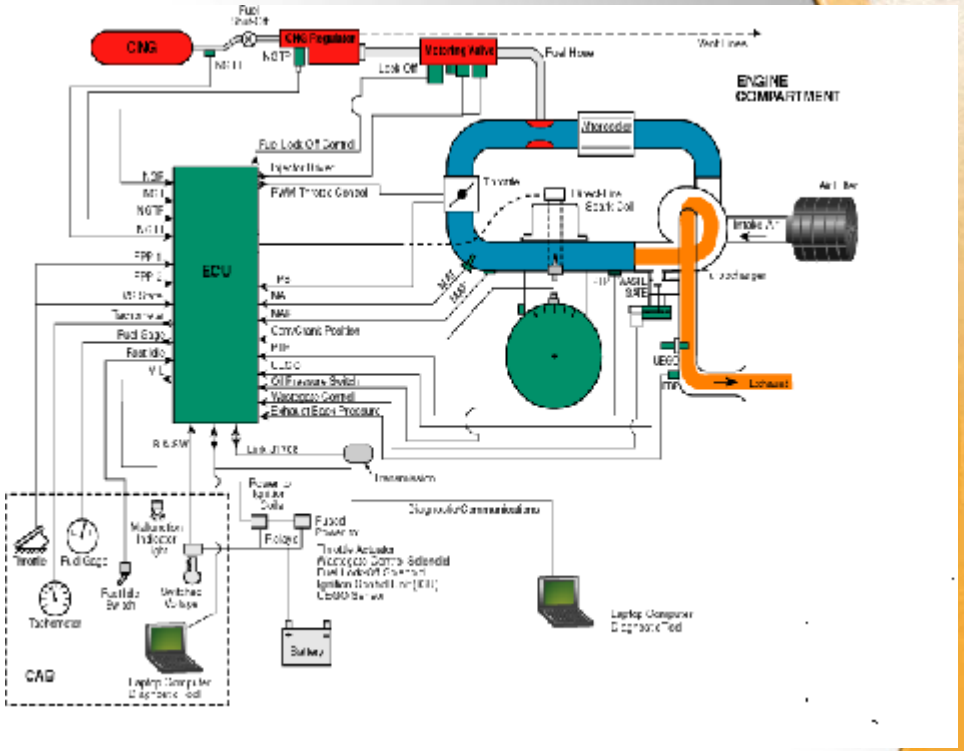

COMMERCIAL APPLICATIONS

Transit Style School Bus

Commercial Bus

40' Transit Bus

Class 6 / 7 / 8 Trucks

Refuse Trucks

- Deere Products and Markets
- Recent Engine Development
- NREL RCI-32027
- Next Steps – Future Direction

Deere NG Engine Development – 2002 - 2003

- **Transit Bus Option Package NG Fuel System**

Objective: Provide options and features demanded by the transit bus market

- **Programmable features**
- **Additional gear auxiliary drive, HD generator mount**
- **1.8 g/hp-hr NOx + NMHC certification – HHD and Urban Bus**
- **1.5 g/hp-hr NOx + NMHC certification – MHD**

Deere NG Engine Development – 2002 - 2003

- **LNG Fuel System**

Objective: Provide LNG fuel system for refuse & utility work truck markets

  - **Proven Fuel System Components**
  - **Proprietary controller**
  - **Same ratings as CNG**

- **Application customization for truck chassis NG Fuel System**
  - **New exhaust manifold**
  - **LNG and CNG fuel systems**
  - **All existing ratings**

Low Emission Certification – Status July 2003

- **Emission – Deere Natural Gas Engine - 07/03**
  - Urban Bus & HHDD: 1.8 (N0x+NMHC) [g/bhp*h]: CNG + LNG
  - MHDD: 1.5 (N0x+NMHC) [g/bhp*h]: CNG + LNG
- **For all hp ratings**
  - 280 hp with 900 lb-ft Calibration
  - Extended to 250 hp with 800 lb-ft
- **Engine Lab Life Test Performance Development**
  - Changes to Spark Table, Boost Table and Phi Table
  - Create new Performance SW
- **Evaluate Various catalyst loading**
  - NMHC Reduction

Low Emission Certification – Status July 2003

- **Evaluation Drivability of Calibration**
  - **Urban Bus / School Bus Drive cycle**
  - **Humidity Testing**
  - **Elevation Testing**
- **Introduce Programmable Features in SW**
  - **Allows for OEM to Program Specific Vehicle Attributes**
    - *Tire Size*
    - *Axle Ration*
    - *Road Speed Limiting*
    - *Elevated Idle*
    - *Fuel Level Processing*
    - *Various Modes of Fan Control*

Low Emission Certification – Fuel Type/Service Class
Urban Bus & HHDD: 1.8 (N0x+NMHC)
MHDD: 1.5 (N0x+NMHC) [g/bhp*h]

			Emission - EPA and CARB - 2004 - 2006					
Service Class	Fuel Type		NOx g/bhp-hr	NMHC g/bhp-hr	NOx + NMHC g/bhp-hr	PM g/bhp-hr	CO g/bhp-hr	Summary
Medium Heavy Duty	CNG - LNG	EPA	-	-	2.4	0.1	15.5	Base Standard
	CNG - LNG	**CARB**	**-**	**-**	**1.5**	**0.01**	**15.5**	**Optional Combined NOx + NMHC 1956.8(a)(2) (1.5 g/bhp-hr NOx+NMHC, 0.01 g/bhp-hr PM)**
Heavy Heavy Duty	CNG - LNG	EPA	-	-	2.4	0.1	15.5	Base Standard
	CNG - LNG	**CARB**	**-**	**-**	**1.8**	**0.01**	**15.5**	**Optional Combined NOx + NMHC 1956.8(a)(2) (1.8 g/bhp-hr NOx+NMHC, 0.01 g/bhp-hr PM)**
Urban Bus	CNG - LNG	EPA	-	-	2.4	0.05	15.5	Base Standard
	CNG - LNG	**CARB**	**-**	**-**	**1.8**	**0.01**	**15.5**	**Optional Combined NOx + NMHC 1956.1(a)(8) (1.8 g/bhp-hr NOx+NMHC, 0.01 g/bhp-hr PM)**

Low Emission Certification – Fuel Type/Service Class
Urban Bus & HHDD: 1.8 (N0x+NMHC)
MHDD: 1.5 (N0x+NMHC) [g/bhp*h]

Service Class	Fuel Type	Rated Power Hp (kW)	Peak Torque lb-ft (Nm)
Medium Heavy Duty	CNG, LNG	250 (186) @ 2200 RPM	800 (1085) @ 1400 RPM
	CNG, LNG	250 (186) @ 2200 RPM	735 (997) @ 1300 RPM
Heavy Heavy Duty	CNG, LNG	280 (209) @ 2200 RPM	900 (1220) @ 1500 RPM
	CNG, LNG	275 (205) @ 2200 RPM	800 (1085) @ 1400 RPM
Urban Bus	CNG, LNG	280 (209) @ 2200 RPM	900 (1220) @ 1500 RPM
	CNG, LNG	275 (205) @ 2200 RPM	800 (1085) @ 1400 RPM

Emissions Regulations / Compliance

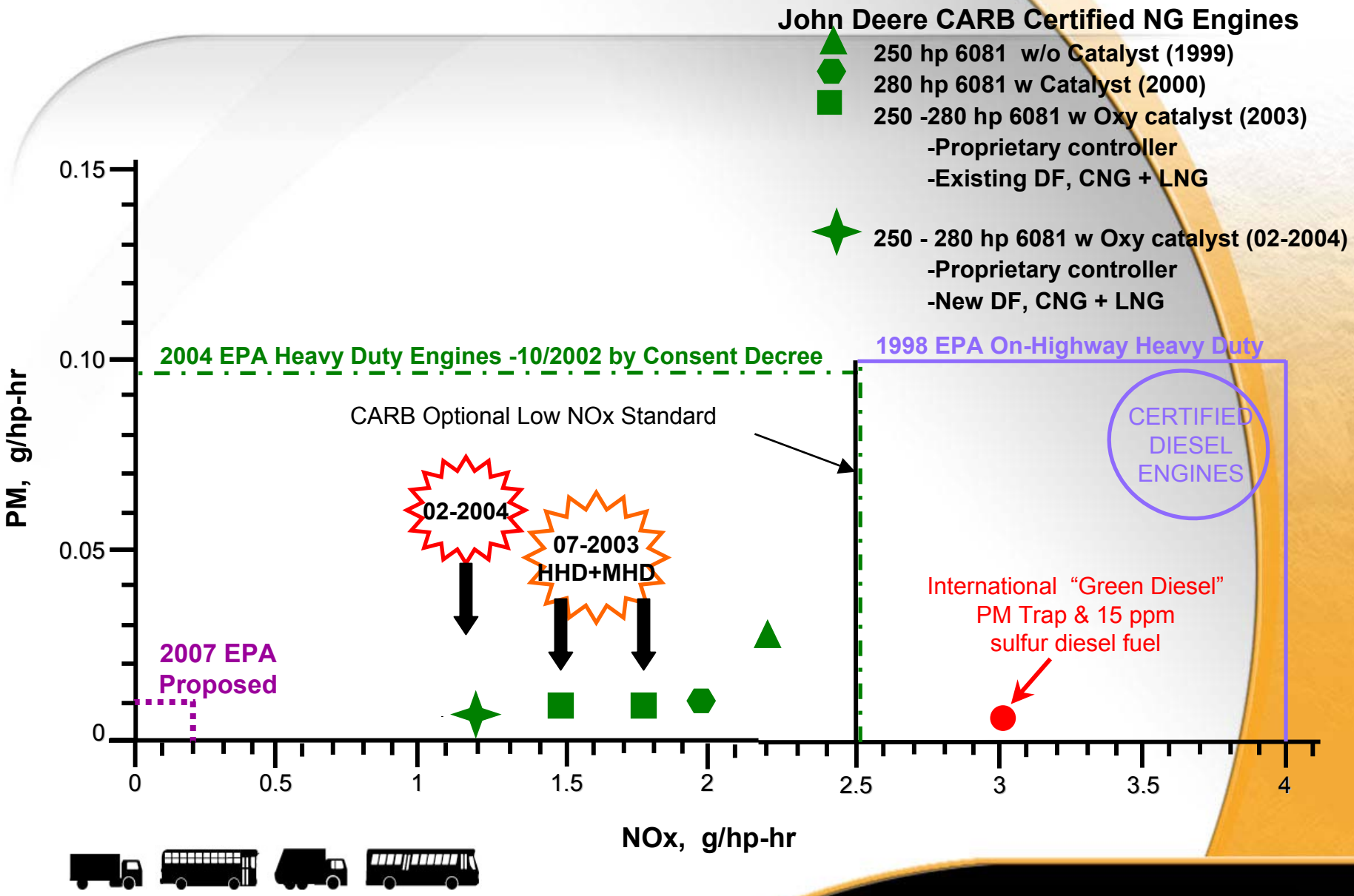

- Deere Products and Markets
- Recent Engine Development
- NREL RCI-32027
- Next Steps – Future Direction

NREL Natural Gas Engine Development – ZCI –3-32027

- **Mandatory Requirements:**
  - Engine ratings
    - ***250 horsepower (h.p.) & 735 foot-pounds (ft-lbs.) or higher***
  - Federal Emission certification to 2004 EPA standards
    - ***with appropriate PM standard:***
    - ***0.1 g/bhp-hr for truck applications***
    - ***0.05 g/bhp-hr for bus applications***
  - CARB low NO_x Emission Certification
    - ***of 1.8 g/bhp-hr (NO_x + NMHC) or lower***

- **Task Specifications:**
  - Completion of Laboratory Engine Work Development
  - On-road Prototype Engine Development in Vehicles
  - Perform FTP Testing / Commercialize Engine

NREL Natural Gas Engine Development – ZCI –3-32027

2002 | 2003 | 2004 | 2006

HHD: 1.8 NOx+NMHC
MHD: 1.5 NOx+NMHC

CNG – LNG
250 hp – 280 hp

NREL Funding ZCI_ 3 32027
Award: July 2003

1.2 NOx+NMHC +
On-Road
Prototype Engine
Development in
Vehicles

Long term - Development -
Stoichiometric - > Engine Development ->0.2 NOx

- Deere Products and Markets
- Recent Engine Development
- NREL RCI-32027
- Next Steps – Future Direction

Deere Natural Gas Engine Plan 2004 - 2006

- **Short-Term Development - NREL Funding – Subcontract ZCI-3-32027**
  - Completion of Laboratory Engine Development)
  - On-Road Prototype Engine Development in Vehicles
  - Perform FTP Testing / Commercialization Engine

- **Long-Term Roadmap 2007 – Natural Gas Engine Development**
  - On-Highway Phase towards 0.2 Nox g/bhp*hr
  - Partnership with Research and Test Sites
  - Test Sites: WMATA, MARTA, Queens Surface…

Deere Natural Gas Engine Plan 2004 - 2006

- **Two potential strategies to meet 2007 emissions**
  - Stoichiometric Combustion
  - Lean Combustion

Based on investigation to date, and input through partnership plan is to pursue stoichiometric combustion.

Deere Natural Gas Engine Plan 2004 - 2006

- **Stoichiometric Combustion Engine Advantages**
  - **Use established auto industry technology**
    - ***External, cooled, EGR***
    - ***Three way catalyst***
  - **Eliminates lean burn misfire possibility**
  - **Lower cost**
  - **No requirement for Urea or NO_x and PM traps**
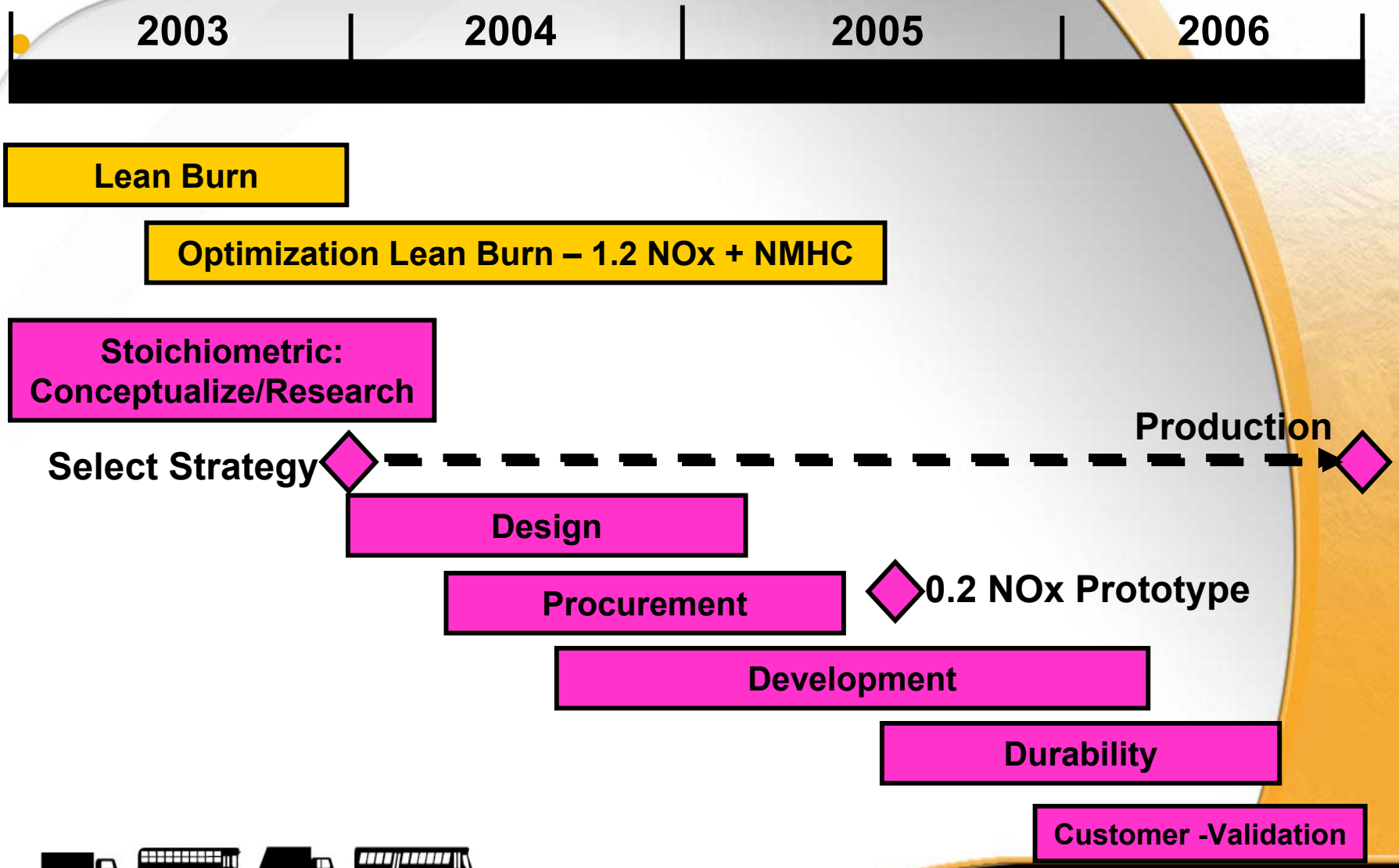
Deere Natural Gas Engine Plan
2004 - 2006