NREL
NATIONAL RENEWABLE ENERGY LABORATORY

Feedstocks

Customized milling and continuous handling of a wide variety of feedstocks

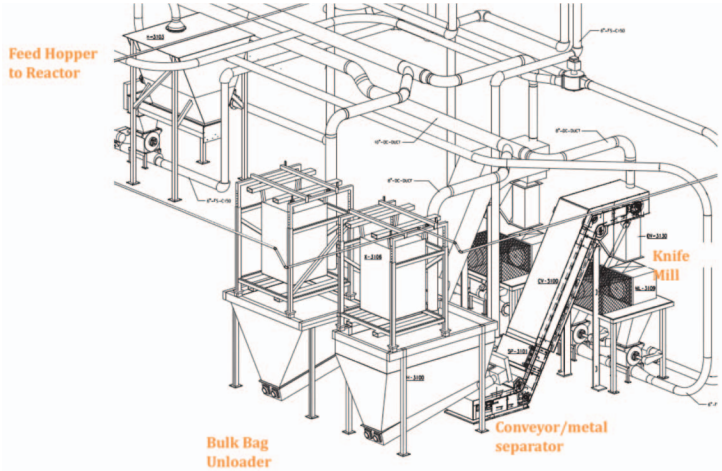

Photo by Warren Gretz, NREL/PIX 05754

Photo by Warren Gretz, NREL/PIX 10446

Photo by Warren Gretz, NREL/PIX 00459

Feedstock handling capabilities

- We have **experience** working with:
  - Perennials – switchgrass, sorghum, and others
  - Crop residue – corn stover, bagasse, wheat straw
  - Forestry biomass – hickory, poplar, oak
- Our mill takes dry material from large super sacks and mills the feedstock to a **variety of sizes**
- The material is moved up to the reactors and fed using a **novel pneumatic system**
- Therefore, we can run the mill **continuously** while operating the reactors

Feedstock handling equipment

Each of the two process trains includes:

- Bulk bag unloader
- Bulk storage hopper
- Bulk feed conveyor
- Knife mill
- Train feed hopper
- Cyclone
- Pneumatic conveyance system -- transfers biomass between bulk storage and train feed hopper and between train feed hopper and cyclone

NREL is a national laboratory of the U.S. Department of Energy, Office of Energy Efficiency and Renewable Energy, operated by the Alliance for Sustainable Energy, LLC.